SECTION 11

WIRING DIAGRAMS & SCHEMATICS

For units starting with serial #1810000

NOTE: *Due to our continuous improvement program, it is recommended to always use the wiring diagrams supplied with the appliance, located in an envelope in the compressor area. These diagrams should only be used for reference prior to servicing a Sub-Zero appliance.*

WIRING DIAGRAM
MODEL: 601R

⚠ WARNING

- This wiring information is provided for use by qualified service personnel only.
- Disconnect appliance from electrical supply before beginning service.
- Be sure all grounding devices are connected when service is complete.
- Failure to observe the above warnings may result in severe electrical shock.

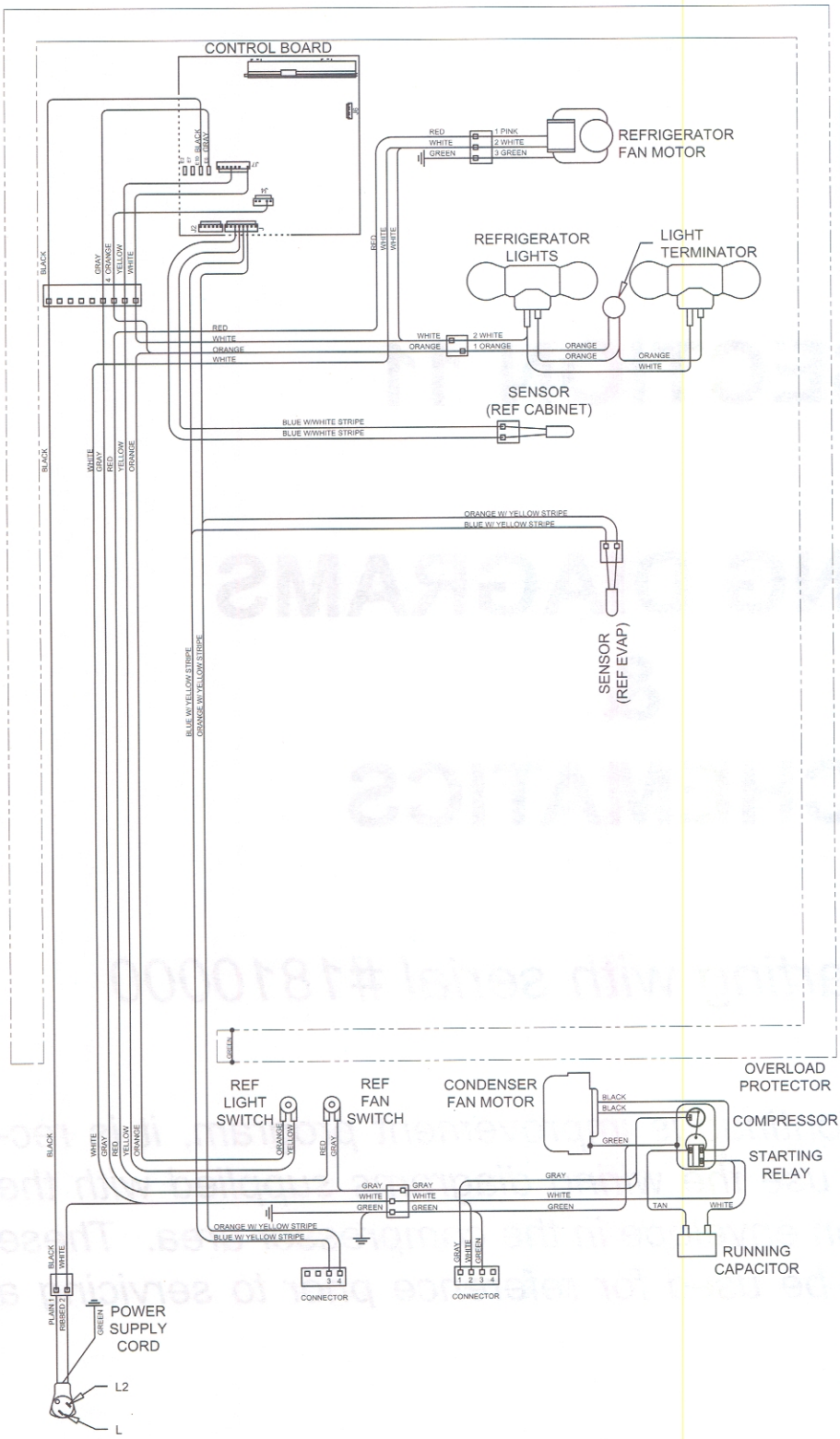

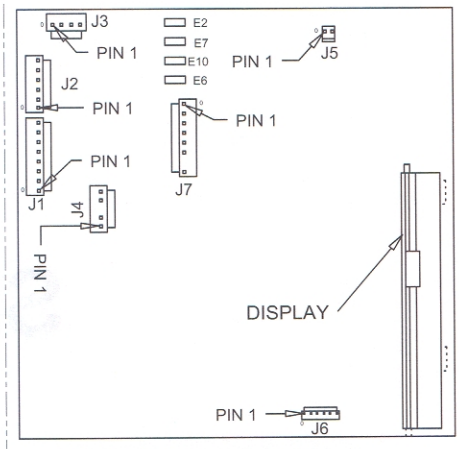

CONTROL BOARD DETAIL

CONTROL BOARD SUMMARY

CIRCUIT	DESCRIPTION	FUNCTION	COLOR
120 VOLT CIRCUITS			
E2	DEF HTR	NOT USED	
E7	FCOMP	NOT USED	
E10	L1	POWER IN	BLACK
E6	RCOMP	REF COMPRESSOR	GRAY
J7-1	C FAN	POWER INTO BOARD POWERS REF COMPRESSOR AND CONDENSER FAN	
J7-2	E FAN	NOT USED	
J7-3	NOT USED		
J7-4	LITES	LIGHTS	YELLOW
J7-5	NOT USED	POWERS LIGHTS	
J7-6	NOT USED		
J7-7	NOT USED(NO PIN)		
J7-8	NEU	NEUTRAL	WHITE
J4-1	NOT USED	NEUTRAL INTO BOARD	ORANGE
J4-2	REF DOOR LIGHT SENSE	SENSES IF REF DOOR OPEN	
J4-3	NOT USED(NO PIN)		
J4-4	NOT USED		
J4-5	NOT USED		
LOW VOLTAGE THERMISTOR CIRCUITS			
J1-1	NOT USED		
J1-2	NOT USED		
J1-3	REF EVAP	SENSES REF EVAP TEMP	ORANGE/YLW
J1-4	REF EVAP	SENSES REF EVAP TEMP	BLUE/YLW
J1-5	REF COMPARTMENT	SENSES REF CABINET TEMP	BLUE/WHITE
J1-6	REF COMPARTMENT	SENSES REF CABINET TEMP	BLUE/WHITE
J1-7	NOT USED		
J1-8	NOT USED		

PART NUMBER 3756711

WIRING SCHEMATIC MODEL: 601R

⚠ WARNING

- This wiring information is provided for use by qualified service personnel only.
- Disconnect appliance from electrical supply before beginning service.
- Be sure all grounding devices are connected when service is complete.
- Failure to observe the above warnings may result in severe electrical shock.

HIGH VOLTAGE WIRING SCHEMATIC

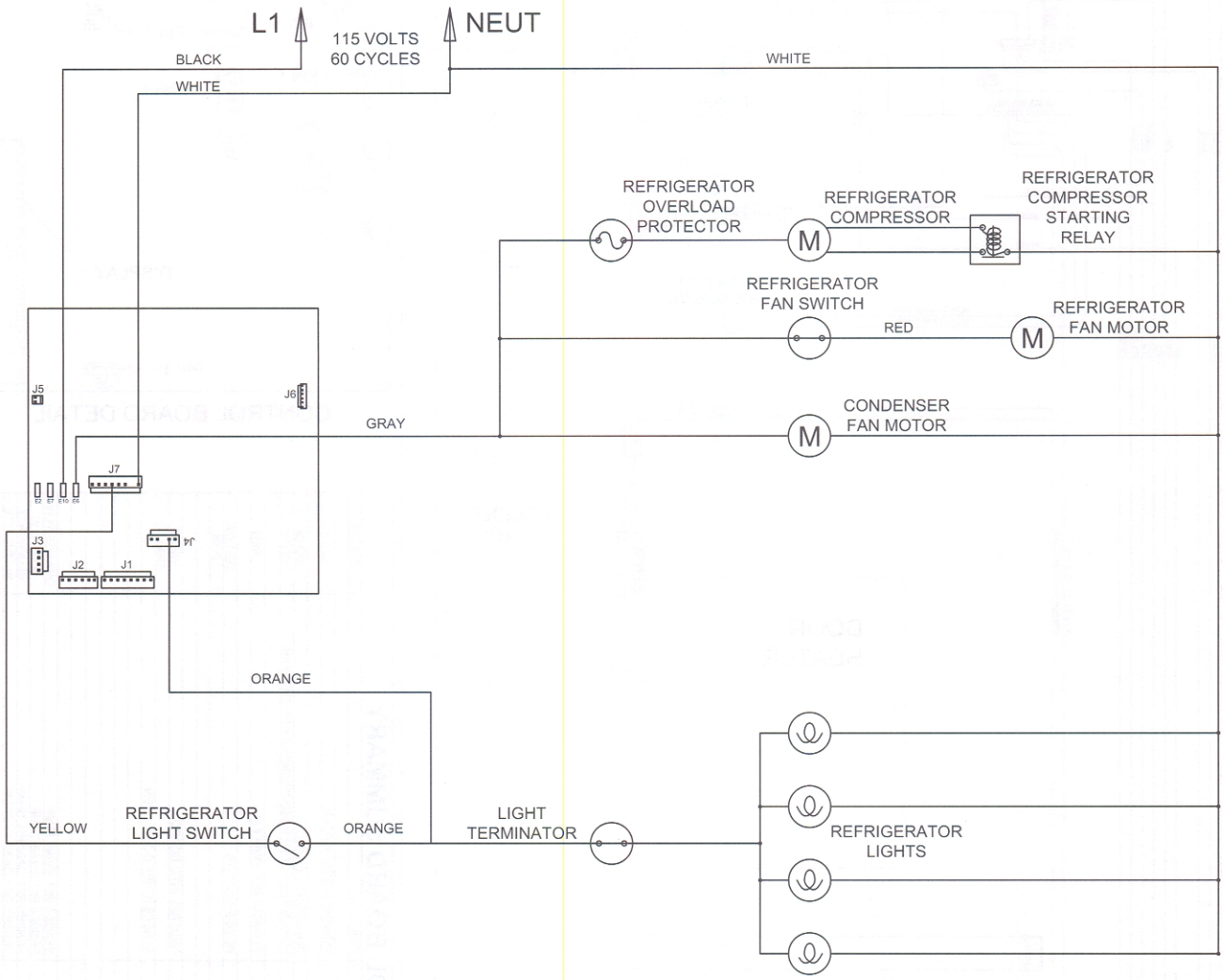

PART NUMBER 3756711

WIRING DIAGRAM MODEL 601RG

⚠ WARNING

- This wiring information is provided for use by qualified service personnel only.
- Disconnect appliance from electrical supply before beginning service.
- Be sure all grounding devices are connected when service is complete.
- Failure to observe the above warnings may result in severe electrical shock.

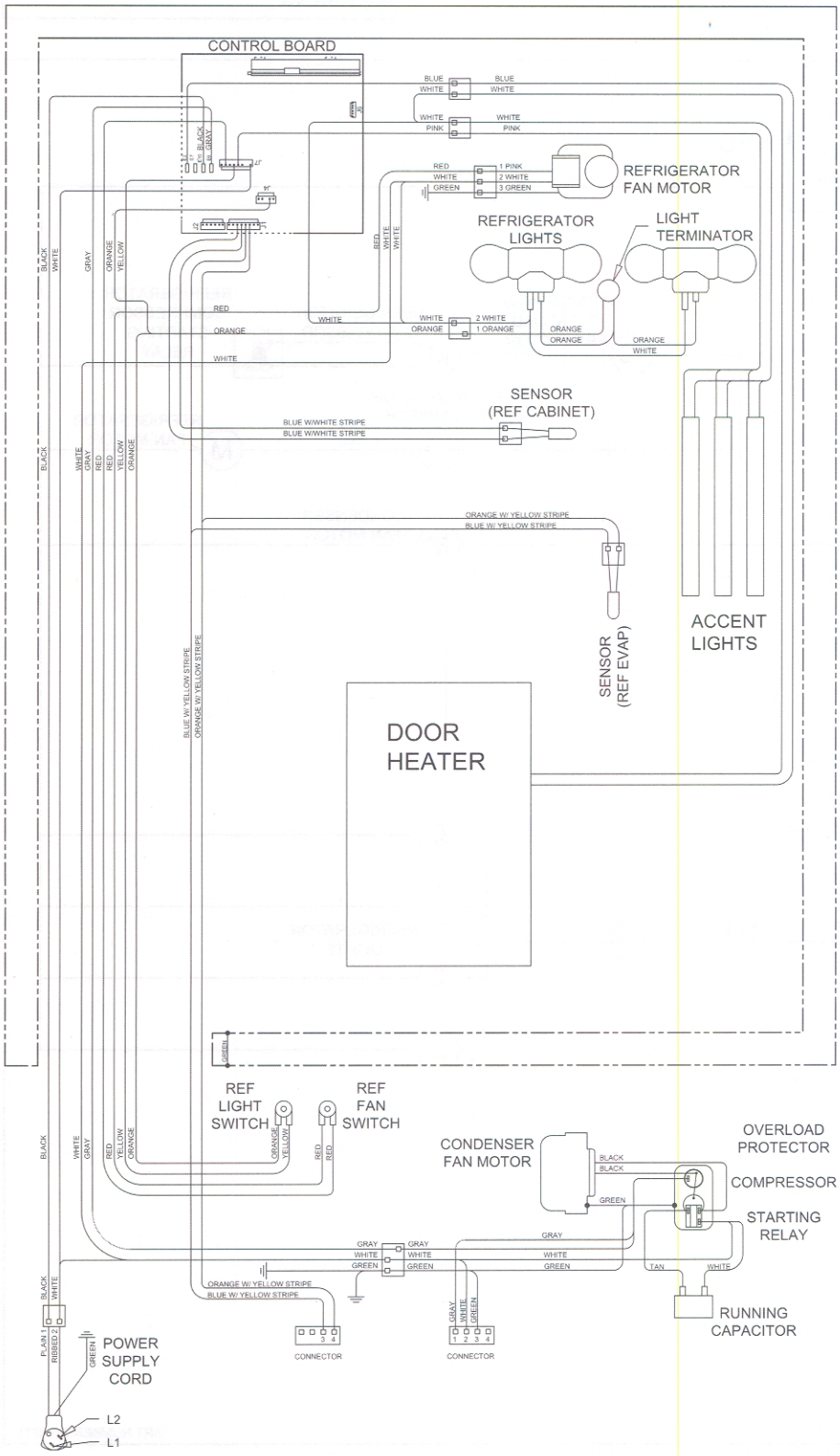

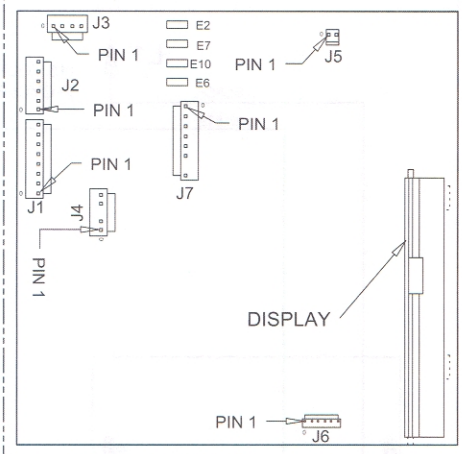

CONTROL BOARD DETAIL

CONTROL BOARD SUMMARY

CIRCUIT	DESCRIPTION	FUNCTION	COLOR
120 VOLT CIRCUITS			
E2 DEF HTR	DOOR HEATER	POWERS DOOR HEATER	BLUE
E7 F COMP	NOT USED		
E10 L1	POWER IN	POWER INTO BOARD	BLACK
E6 R COMP	REF COMPRESSOR	POWERS REF COMPRESSOR AND CONDENSER FAN	GRAY
J7-1 C FAN	NOT USED		
J7-2 E FAN	REF EVAP FAN	POWERS REF EVAP FAN	RED
J7-3	NOT USED		
J7-4 LITES	LIGHTS	POWERS LIGHTS	YELLOW PINK
J7-5 ICE	ACCENT LIGHTS		
J7-6	NOT USED		
J7-7	NOT USED(NO PIN)		
J7-8 NEU	NEUTRAL	NEUTRAL INTO BOARD	WHITE ORANGE
J4-1	NOT USED		
J4-2	REF DOOR LIGHT SENSE	SENSES IF REF DOOR OPEN	
J4-3	NOT USED(NO PIN)		
J4-4	NOT USED		
J4-5	NOT USED		
LOW VOLTAGE THERMISTOR CIRCUITS			
J1-1	NOT USED		
J1-2	NOT USED		
J1-3	REF EVAP	SENSES REF EVAP TEMP	ORANGE/YLW
J1-4	REF EVAP	SENSES REF EVAP TEMP	BLUE/YLW
J1-5	REF COMPARTMENT	SENSES REF CABINET TEMP	BLUE/WHITE
J1-6	REF COMPARTMENT	SENSES REF CABINET TEMP	BLUE/WHITE
J1-7	NOT USED		
J1-8	NOT USED		

PART NUMBER 3757370

WIRING SCHEMATIC MODEL: 601RG

⚠ WARNING

- This wiring information is provided for use by qualified service personnel only.
- Disconnect appliance from electrical supply before beginning service.
- Be sure all grounding devices are connected when service is complete.
- Failure to observe the above warnings may result in severe electrical shock.

HIGH VOLTAGE WIRING SCHEMATIC

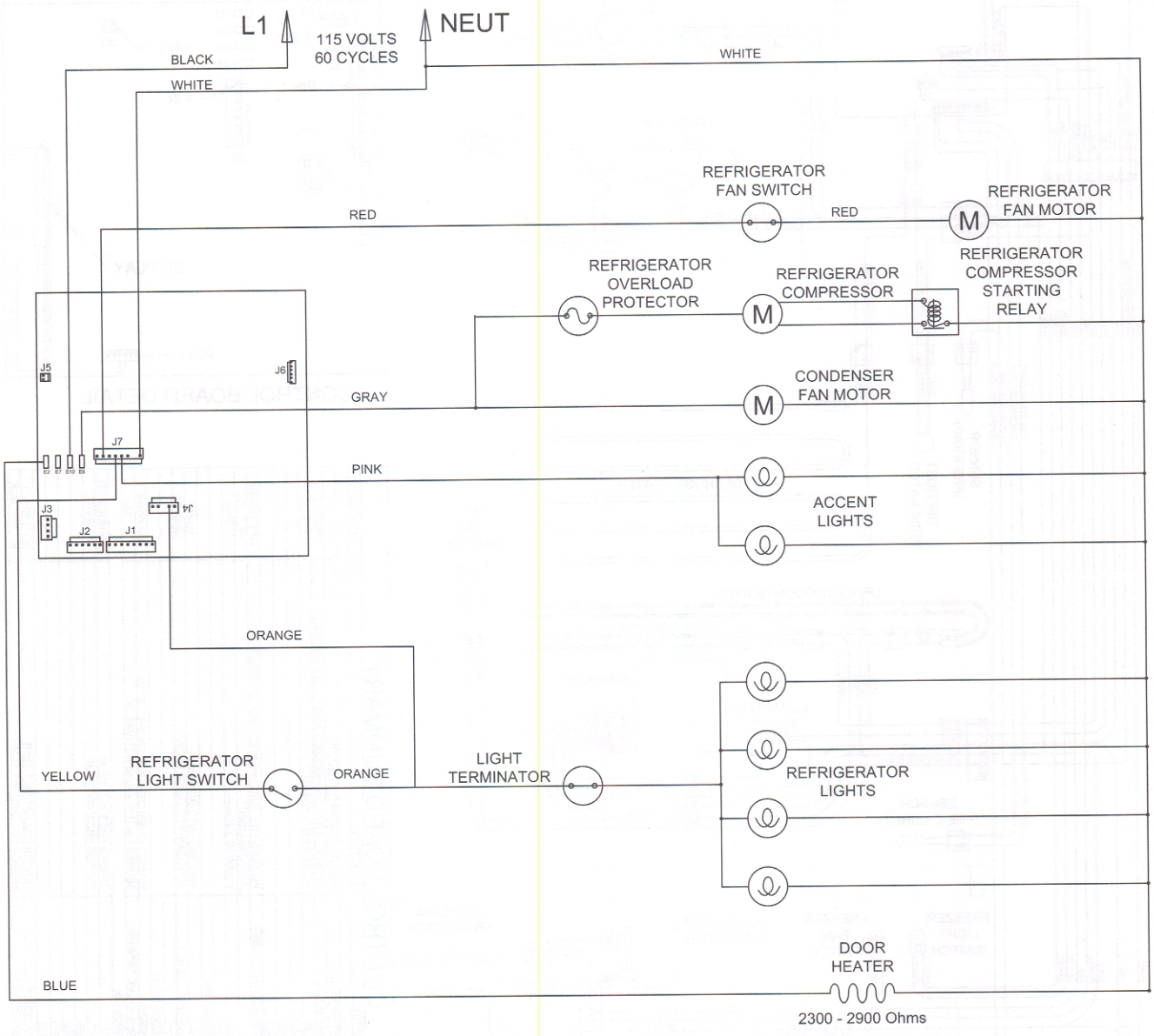

PART NUMBER 3756711

WIRING DIAGRAM
MODEL: 601F

⚠ WARNING

- This wiring information is provided for use by qualified service personnel only.
- Disconnect appliance from electrical supply before beginning service.
- Be sure all grounding devices are connected when service is complete.
- Failure to observe the above warnings may result in severe electrical shock.

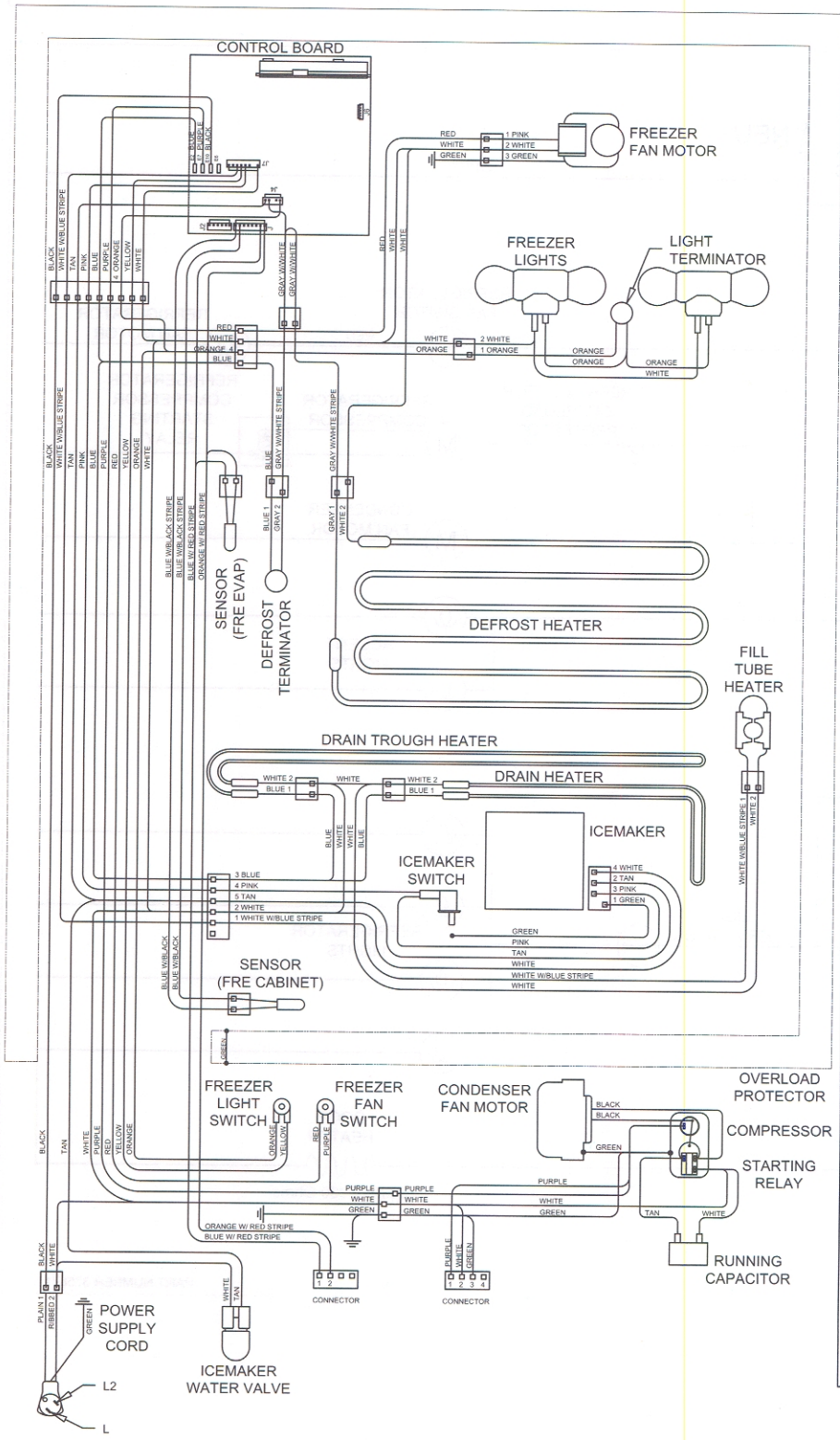

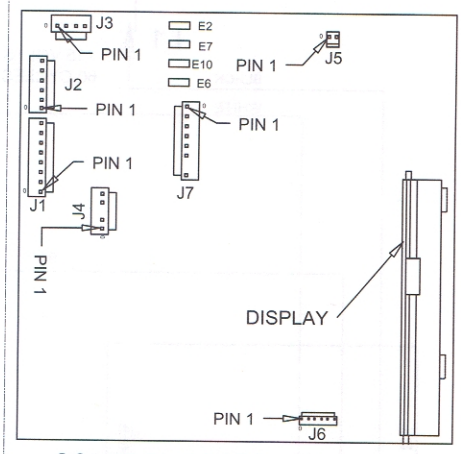

CONTROL BOARD DETAIL

CONTROL BOARD SUMMARY

CIRCUIT	DESCRIPTION	FUNCTION	COLOR
120 VOLT CIRCUITS			
E2	DEF HTR	DEFROST HEATER	POWERS DEFROST CIRCUIT	BLUE
E7	FCOMP	FRZ COMPRESSOR	POWERS FRZ COMPRESSOR AND CONDENSER FAN	PURPLE
E10	L1	POWER IN	POWER INTO BOARD	BLACK
E6	RCOMP	NOT USED		
J7-1	C FAN	NOT USED		
J7-2	E FAN	NOT USED		
J7-3	LITES	ICE MAKER ACC (FILL TUBE)	POWERS FILL TUBE HEATER AND ACCESSORIES	WHITE/BLUE
J7-4		LIGHTS	POWERS LIGHTS	YELLOW
J7-5		ICE MAKER	POWERS ICE MAKER	PINK
J7-6		NOT USED		
J7-7		NOT USED(NO PIN)		
J7-8	NEU	NEUTRAL	NEUTRAL INTO BOARD	WHITE
J4-1		FRZ DOOR LIGHT SENSE	SENSES IF FRZ DOOR OPEN	ORANGE
J4-2		NOT USED		
J4-3		NOT USED(NO PIN)		
J4-4		DEF SENSOR	SENSES WHEN DEF HEATER SHUTS OFF	GRAY/WHITE
J4-5		ICE MAKER VALVE SENSOR	SENSES WATER VALVE ACTIVATION	TAN
LOW VOLTAGE THERMISTOR CIRCUITS				
J1-1		FRZ EVAP	SENSES FRZ EVAP TEMP	ORANGE/RED
J1-2		FRZ EVAP	SENSES FRZ EVAP TEMP	BLUE/RED
J1-3		NOT USED		
J1-4		NOT USED		
J1-5		NOT USED		
J1-6		NOT USED		
J1-7		FRZ COMPARTMENT	SENSES FRZ CABINET TEMP	BLUE/BLACK
J1-8		FRZ COMPARTMENT	SENSES FRZ CABINET TEMP	BLUE/BLACK

PART NUMBER 3756690

WIRING SCHEMATIC MODEL: 601F

⚠ WARNING

- This wiring information is provided for use by qualified service personnel only.
- Disconnect appliance from electrical supply before beginning service.
- Be sure all grounding devices are connected when service is complete.
- Failure to observe the above warnings may result in severe electrical shock.

HIGH VOLTAGE WIRING SCHEMATIC

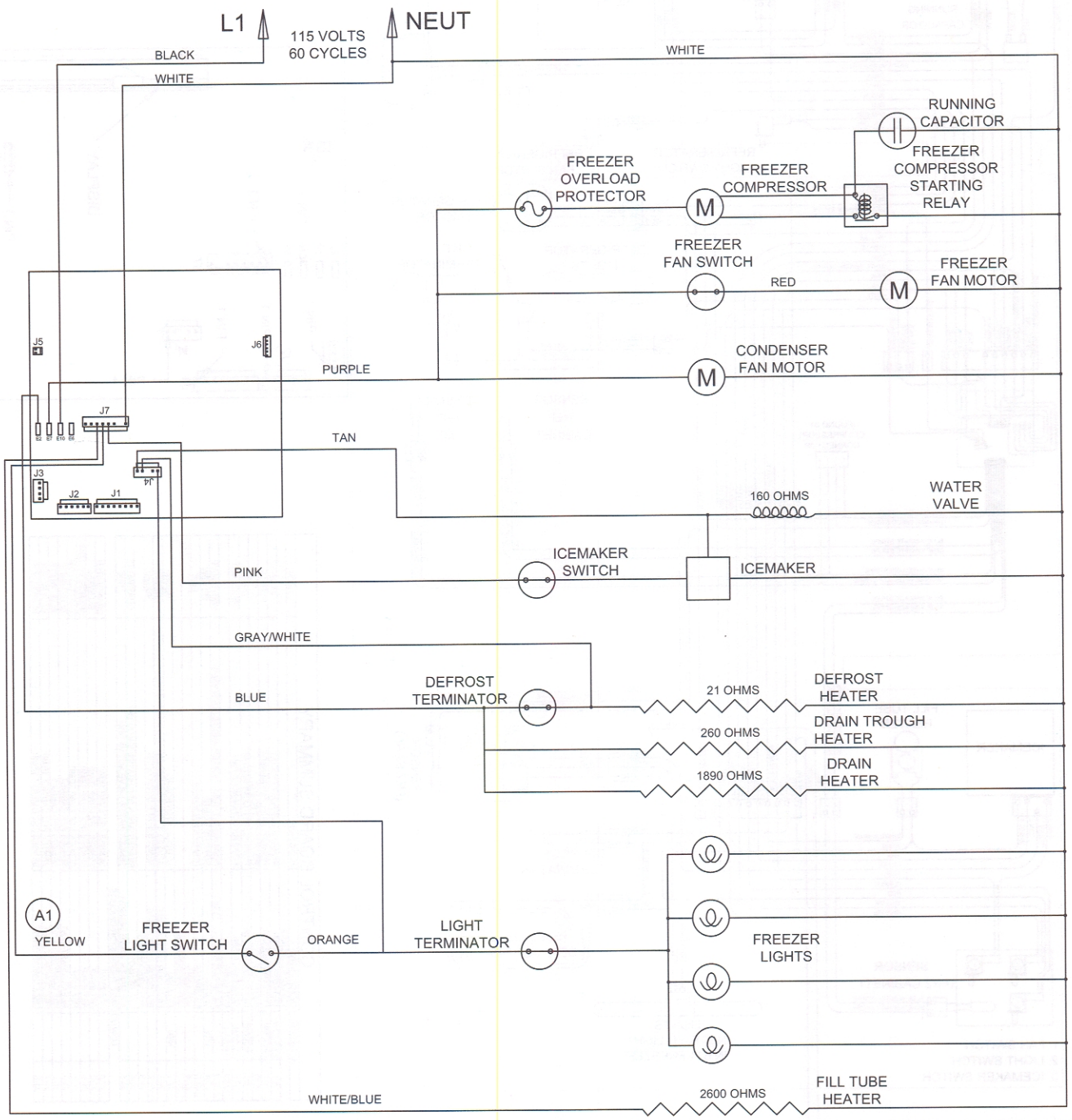

PART NUMBER 3756690

WIRING DIAGRAM MODELS: 611 & 650

⚠ WARNING

- This wiring information is provided for use by qualified service personnel only.
- Disconnect appliance from electrical supply before beginning service.
- Be sure all grounding devices are connected when service is complete.
- Failure to observe the above warnings may result in severe electrical shock.

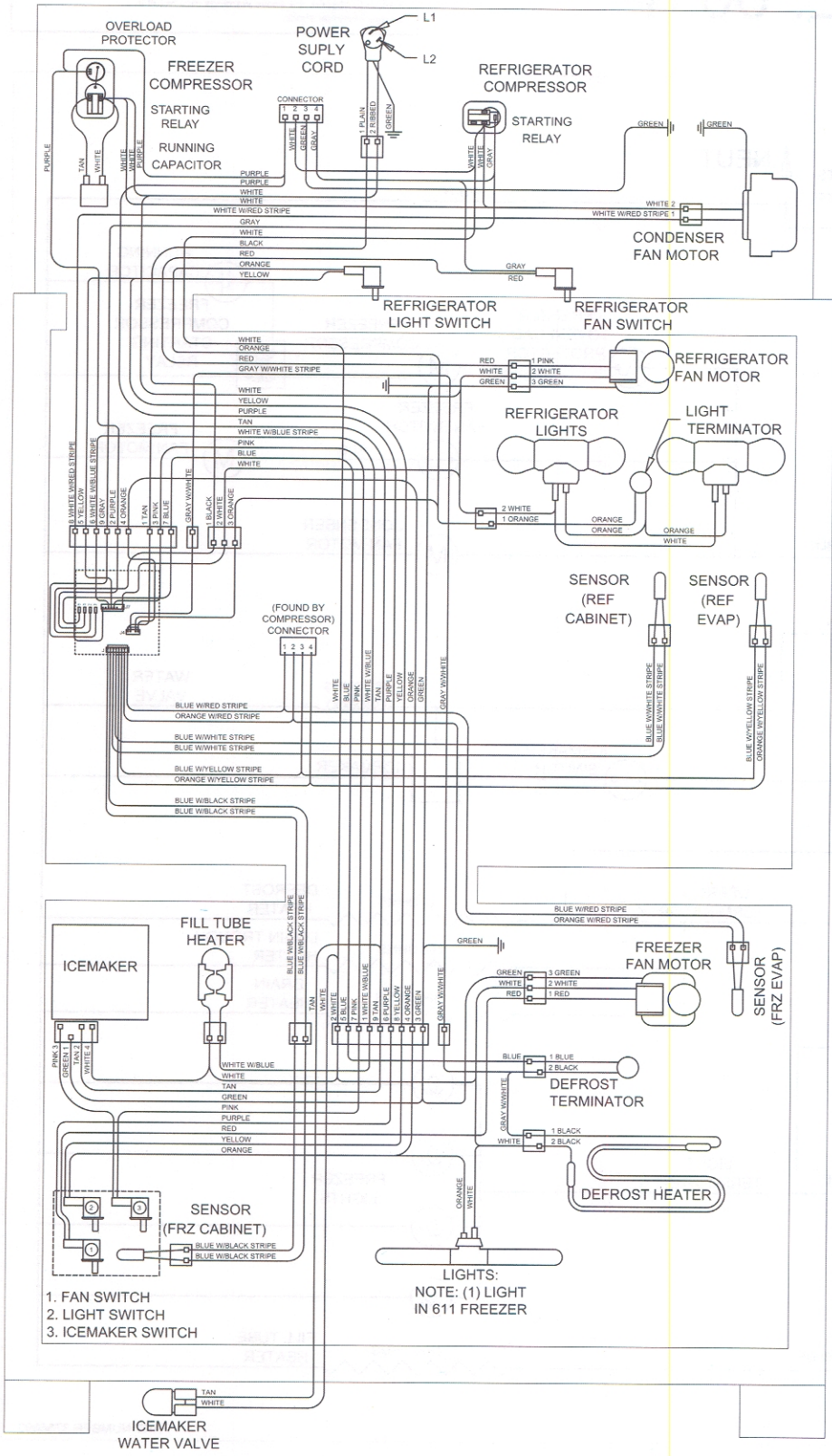

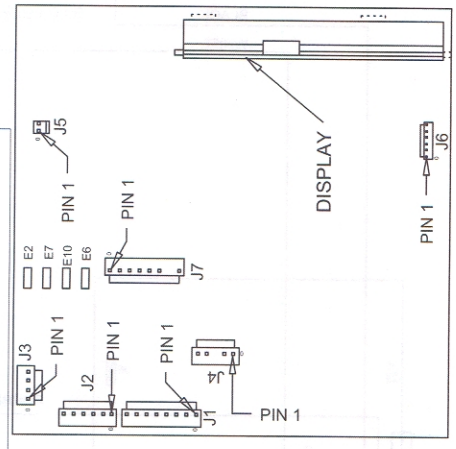

CONTROL BOARD SUMMARY

CIRCUIT	DESCRIPTION	FUNCTION	COLOR
	120 VOLT CIRCUITS		
E2	DEF HTR	POWERS DEFROST CIRCUIT	BLUE
E7	DEFROST HEATER	POWERS FRZ COMPRESSOR	PURPLE
E10	FCOMP	POWERS FRZ COMPRESSOR	BLACK
E6	RCOMP	POWER IN COMPRESSOR	GRAY
J7-1	C FAN	POWERS REF COMPRESSOR	WHITE/RED
J7-2	E FAN	POWERS CONDENSER FAN	
J7-3	NOT USED		
J7-4	ICE MAKER ACC (FILL TUBE)	POWERS FILL TUBE HEATER AND ACCESSORIES	WHITE/BLUE
J7-5	LITE	POWERS LIGHTS	YELLOW
J7-6	LIGHTS	POWERS LIGHTS	PINK
J7-7	ICE MAKER	POWERS ICE MAKER	
J7-8	NOT USED		
J4-1	NOT USED(NO PIN)		
J4-2	NEU	NEUTRAL INTO BOARD	WHITE
J4-3	NEUTRAL		BROWN
J4-4	FRZ DOOR LIGHT SENSE	SENSES IF FRZ DOOR OPEN	ORANGE
J4-5	NOT USED(NO PIN)		
	REF DOOR LIGHT SENSE	SENSES IF REF DOOR OPEN	
	DEF SENSOR	SENSES WHEN DEF HEATER SHUTS OFF	GRAY/WHITE
	ICE MAKER VALVE SENSOR	SENSES WATER VALVE ACTIVATION	TAN
	LOW VOLTAGE THERMISTOR CIRCUITS		
J1-1	FRZ EVAP	SENSES FRZ EVAP TEMP	ORANGE/RED
J1-2	FRZ EVAP	SENSES FRZ EVAP TEMP	BLUE/RED
J1-3	REF EVAP	SENSES REF EVAP TEMP	ORANGE/YELLOW
J1-4	REF EVAP	SENSES REF EVAP TEMP	BLUE/YELLOW
J1-5	REF COMPARTMENT	SENSES REF CABINET	BLUE/WHITE
J1-6	REF COMPARTMENT	SENSES REF CABINET	BLUE/WHITE
J1-7	FRZ COMPARTMENT	SENSES FRZ CABINET TEMP	BLUE/BLACK
J1-8	FRZ COMPARTMENT	SENSES FRZ CABINET TEMP	BLUE/BLACK

PART NUMBER 3756490

WIRING SCHEMATIC MODELS: 611 & 650

⚠ WARNING

- This wiring information is provided for use by qualified service personnel only.
- Disconnect appliance from electrical supply before beginning service.
- Be sure all grounding devices are connected when service is complete.
- Failure to observe the above warnings may result in severe electrical shock.

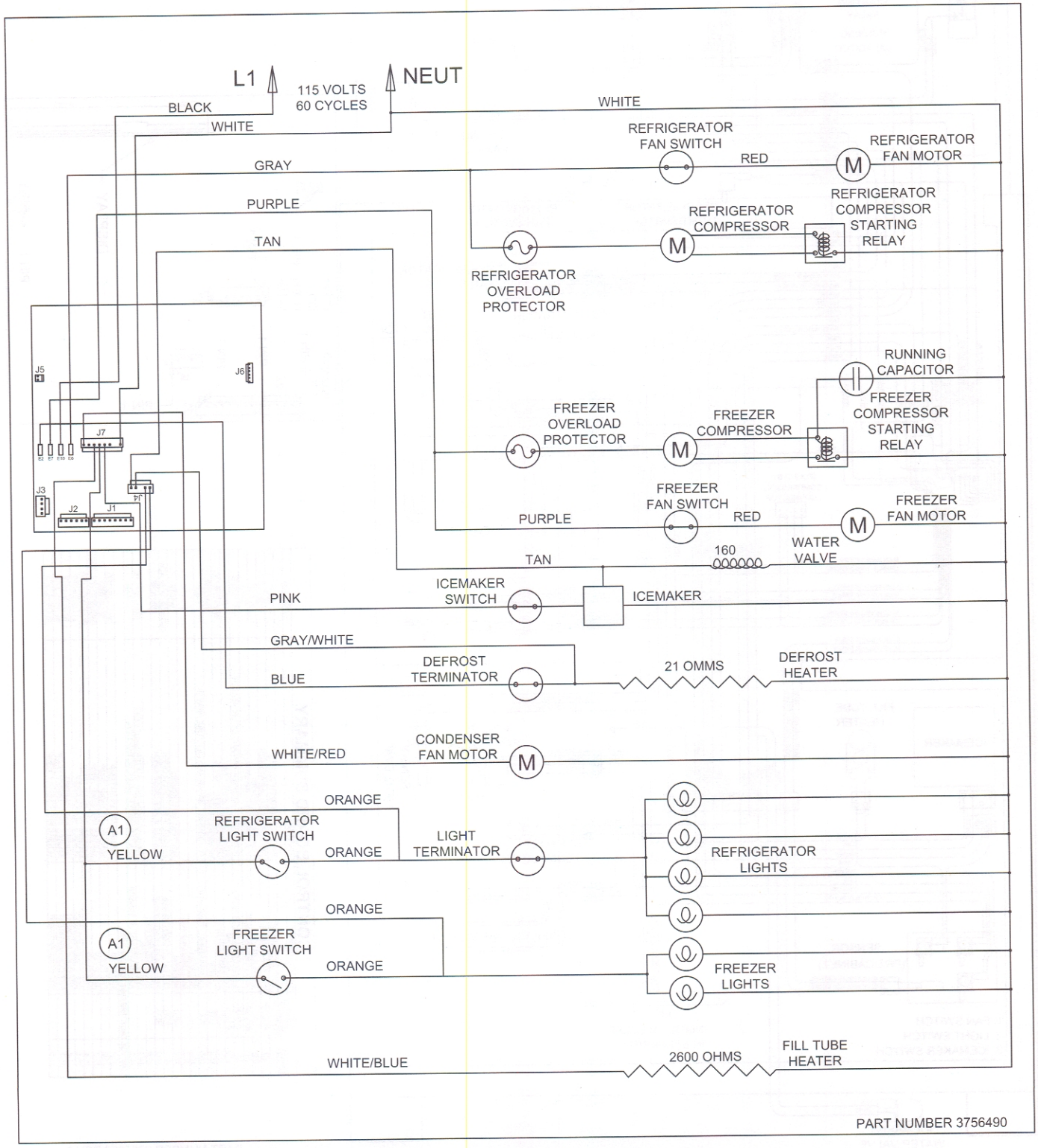

PART NUMBER 3756490

WIRING DIAGRAM
MODELS: 611G & 650G

⚠ WARNING

- This wiring information is provided for use by qualified service personnel only.
- Disconnect appliance from electrical supply before beginning service.
- Be sure all grounding devices are connected when service is complete.
- Failure to observe the above warnings may result in severe electrical shock.

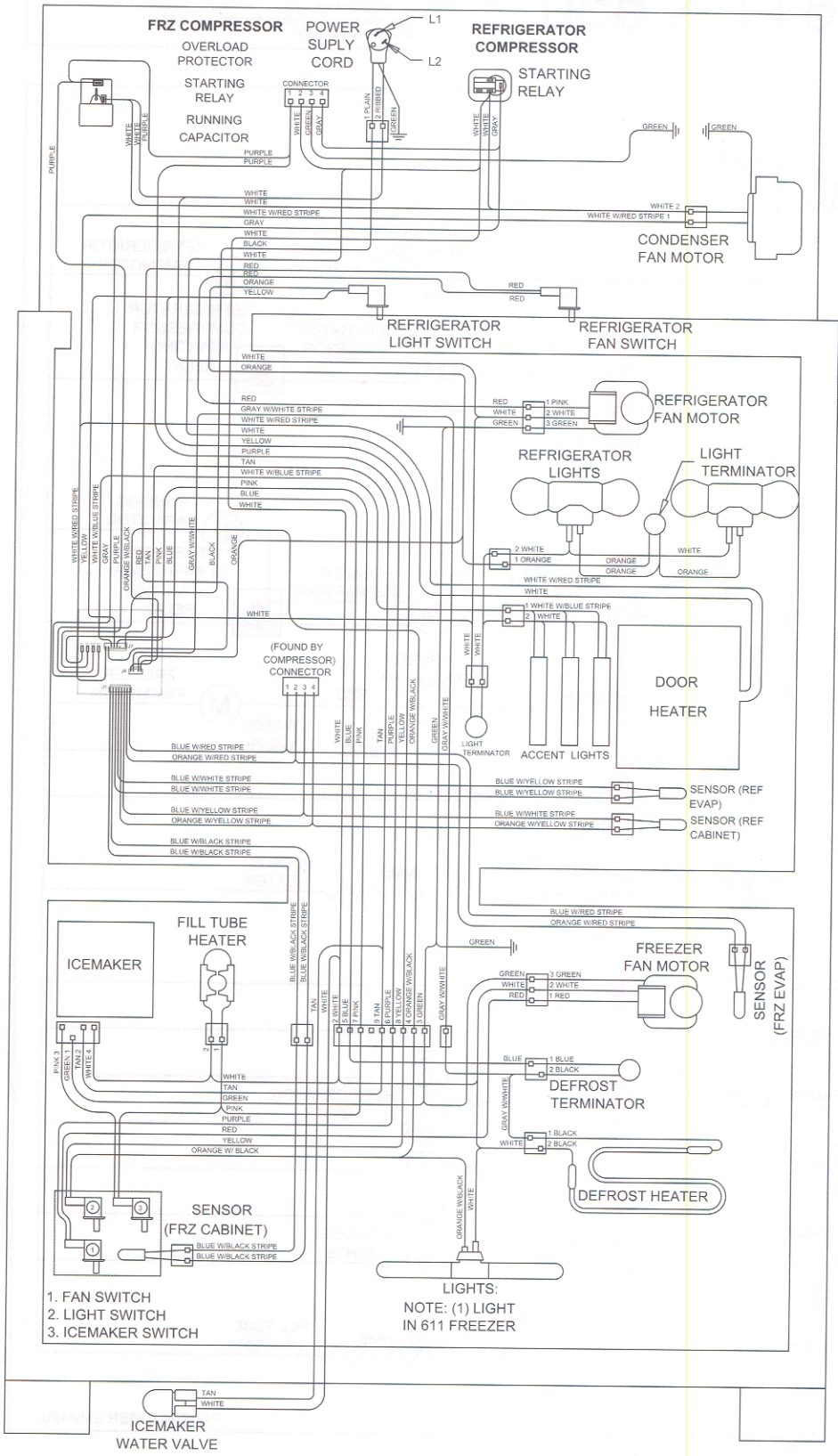

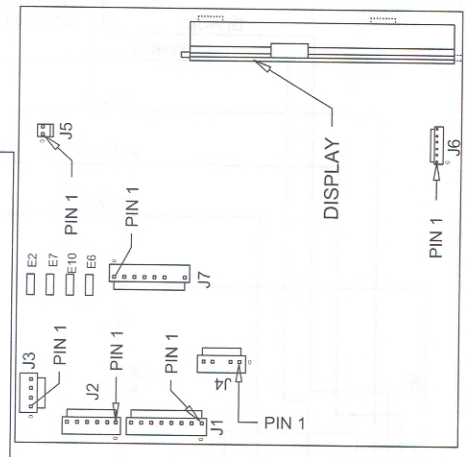

CONTROL BOARD SUMMARY

CIRCUIT	DESCRIPTION	FUNCTION	COLOR
120 VOLT CIRCUITS			
E2	DEFROST HEATER	POWERS DEFROST CIRCUIT	BLUE
E7	FRZ COMPRESSOR	POWERS FRZ COMPRESSOR	PURPLE
E10	FCOMP	POWERS FRZ COMPRESSOR	BLACK
E6	L1	POWER IN	BROWN
J7-1	RCOMP	POWERS REF COMPRESSOR	WHITE/RED
J7-2	C FAN	COND FAN & DOOR HEATER	RED
J7-3	E FAN	REF EVAP FAN	WHITE/BLUE
J7-4	IACC	ACCENT LIGHTS	YELLOW
J7-5	LITE	LIGHTS	PINK
J7-6	ICE	ICE MAKER/FILL TUBE HTR	
J7-7		NOT USED(NO PIN)	
J7-8	NEU	NEUTRAL INTO BOARD	WHITE
J4-1	FDR	FRZ DOOR LIGHT SENSE	ORANGE W/BLACK
J4-2	RDR	REF DOOR LIGHT SENSE	ORANGE
J4-3		DEF SENSOR(NO PIN)	
J4-4		DEF SENSOR(NO PIN)	GRAY/WHITE
J4-5		ICE MAKER VALVE SENSOR	TAN
LOW VOLTAGE THERMISTOR CIRCUITS			
J1-1		SENSES FRZ EVAP TEMP	ORANGE/RED
J1-2		FRZ EVAP	BLUE/RED
J1-3		REF EVAP	ORANGE/YELLOW
J1-4		SENSES REF EVAP TEMP	BLUE/YELLOW
J1-5		REF COMPARTMENT	BLUE/WHITE
J1-6		SENSES REF CABINET	BLUE/BLACK
J1-7		FRZ COMPARTMENT	BLUE/BLACK
J1-8		SENSES FRZ CABINET TEMP	BLUE/BLACK

PART NUMBER 3757920 REV A

WIRING SCHEMATIC MODELS: 611G & 650G

⚠ WARNING

- This wiring information is provided for use by qualified service personnel only.
- Disconnect appliance from electrical supply before beginning service.
- Be sure all grounding devices are connected when service is complete.
- Failure to observe the above warnings may result in severe electrical shock.

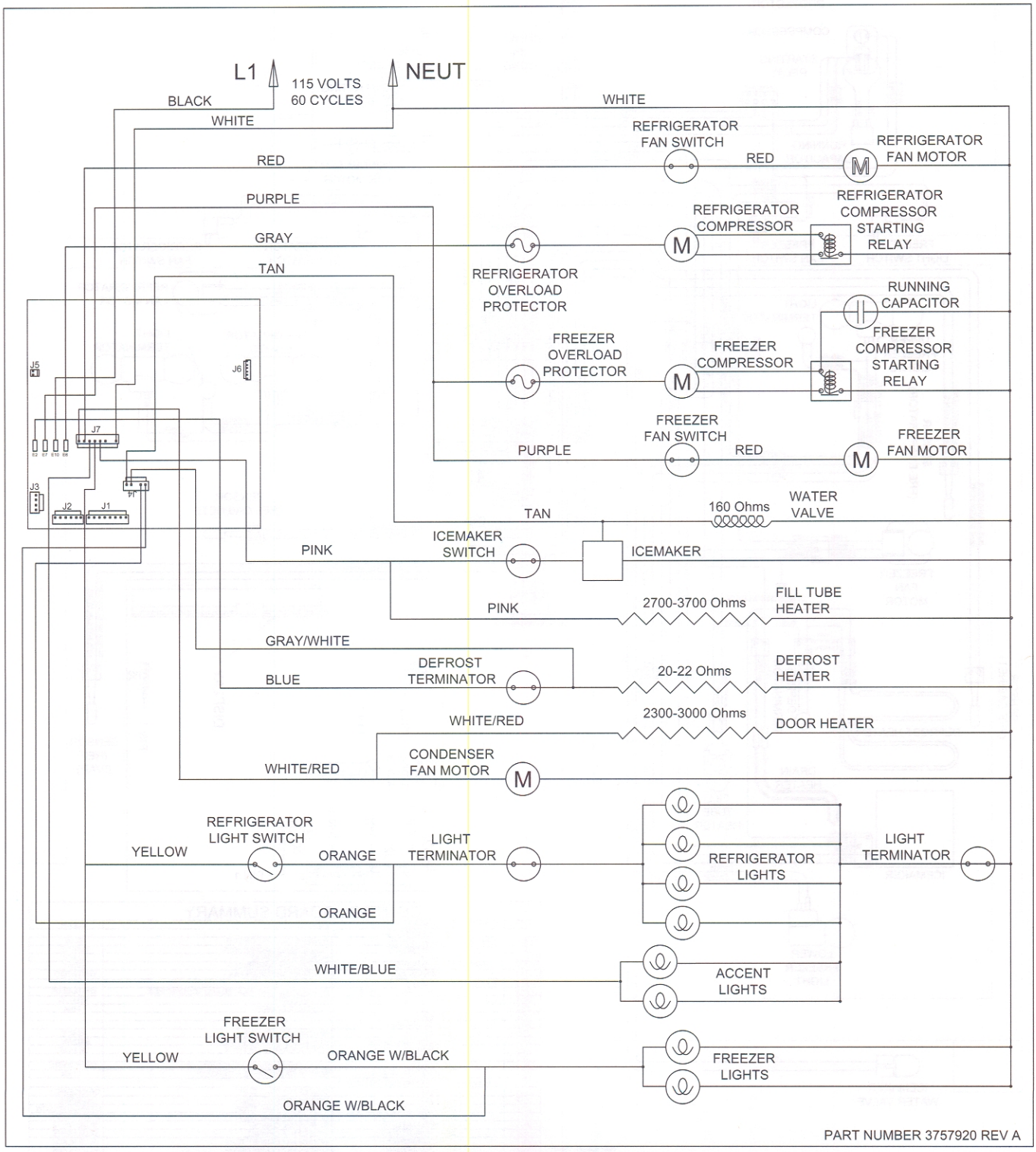

PART NUMBER 3757920 REV A

WIRING DIAGRAM MODELS: 632/642

WARNING

- This wiring information is provided for use by qualified service personnel only.
- Disconnect appliance from electrical supply before beginning service.
- Be sure all grounding devices are connected when service is complete.
- Failure to observe the above warnings may result in severe electrical shock.

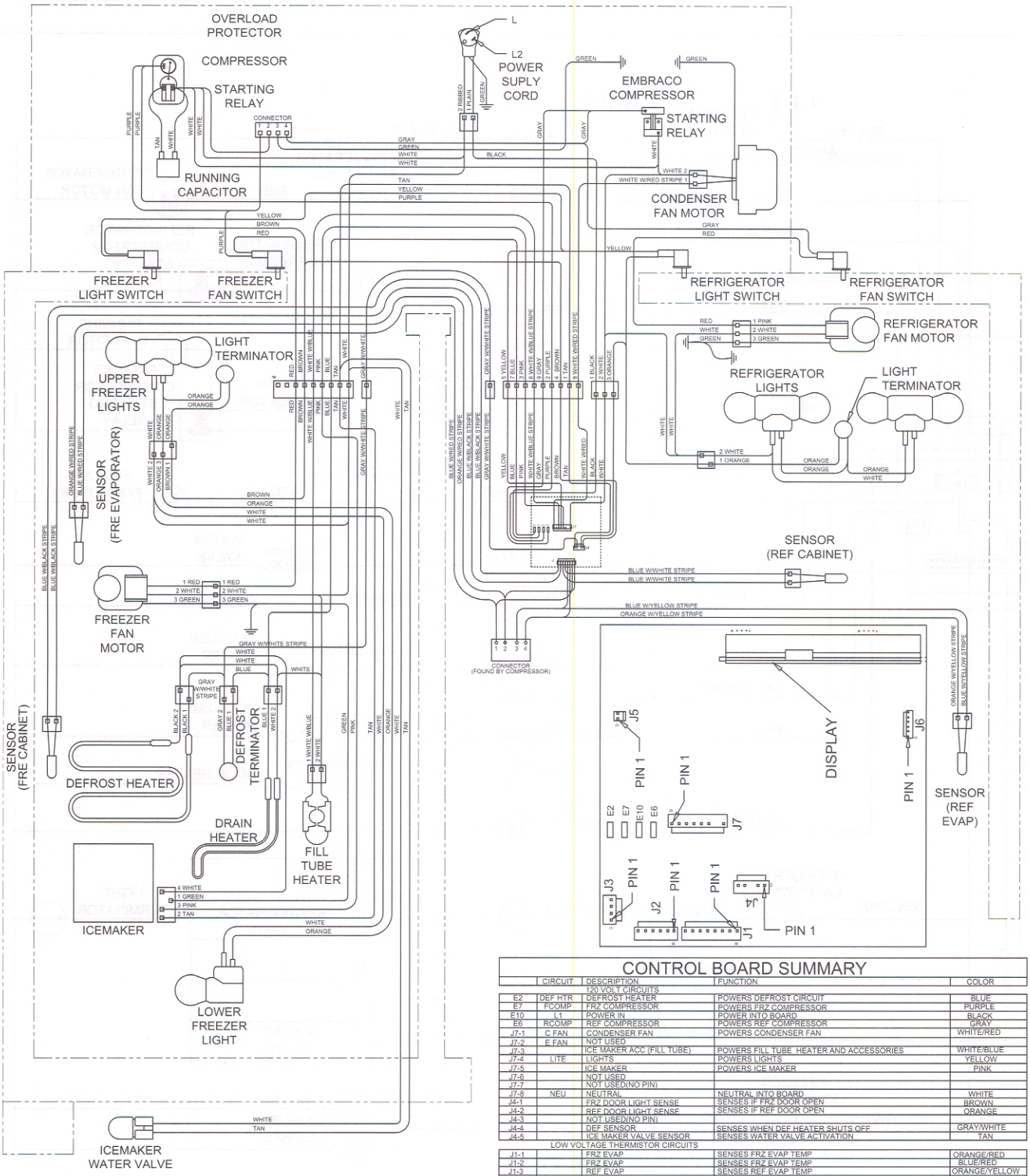

CONTROL BOARD SUMMARY

	CIRCUIT	DESCRIPTION	FUNCTION	COLOR
		120 VOLT CIRCUITS		
E2	DEF HTR	DEFROST HEATER	POWERS DEFROST CIRCUIT	BLUE
E7	FCOMP	FRZ COMPRESSOR	POWERS FRZ COMPRESSOR	PURPLE
E10	L1	POWER IN	POWER INTO BOARD	BLACK
E6	RCOMP	REF COMPRESSOR	POWERS REF COMPRESSOR	GRAY
J7-1	C FAN	CONDENSER FAN	POWERS CONDENSER FAN	WHITE/RED
J7-2	E FAN	NOT USED		
J7-3		ICE MAKER ACC (FILL TUBE)	POWERS FILL TUBE HEATER AND ACCESSORIES	WHITE/BLUE
J7-4	LITE	LIGHTS	POWERS LIGHTS	YELLOW
J7-5		ICE MAKER	POWERS ICE MAKER	PINK
J7-6		NOT USED		
J7-7		NOT USED(NO PIN)		
J7-8	NEU	NEUTRAL	NEUTRAL INTO BOARD	WHITE
J4-1		FRZ DOOR LIGHT SENSE	SENSES IF FRZ DOOR OPEN	BROWN
J4-2		REF DOOR LIGHT SENSE	SENSES IF REF DOOR OPEN	ORANGE
J4-3		NOT USED(NO PIN)		
J4-4		DEF SENSOR	SENSES WHEN DEF HEATER SHUTS OFF	GRAY/WHITE
J4-5		ICE MAKER VALVE SENSOR	SENSES WATER VALVE ACTIVATION	TAN
		LOW VOLTAGE THERMISTOR CIRCUITS		
J1-1		FRZ EVAP	SENSES FRZ EVAP TEMP	ORANGE/RED
J1-2		FRZ EVAP	SENSES FRZ EVAP TEMP	BLUE/RED
J1-3		REF EVAP	SENSES REF EVAP TEMP	ORANGE/YELLOW
J1-4		REF EVAP	SENSES REF EVAP TEMP	BLUE/YELLOW
J1-5		REF COMPARTMENT	SENSES REF CABINET	BLUE/WHITE
J1-6		REF COMPARTMENT	SENSES REF CABINET	BLUE/WHITE
J1-7		FRZ COMPARTMENT	SENSES FRZ CABINET TEMP	BLUE/BLACK
J1-8		FRZ COMPARTMENT	SENSES FRZ CABINET TEMP	BLUE/BLACK

PART NUMBER 3756771

WIRING SCHEMATIC MODELS: 632/642

⚠ WARNING

- This wiring information is provided for use by qualified service personnel only.
- Disconnect appliance from electrical supply before beginning service.
- Be sure all grounding devices are connected when service is complete.
- Failure to observe the above warnings may result in severe electrical shock.

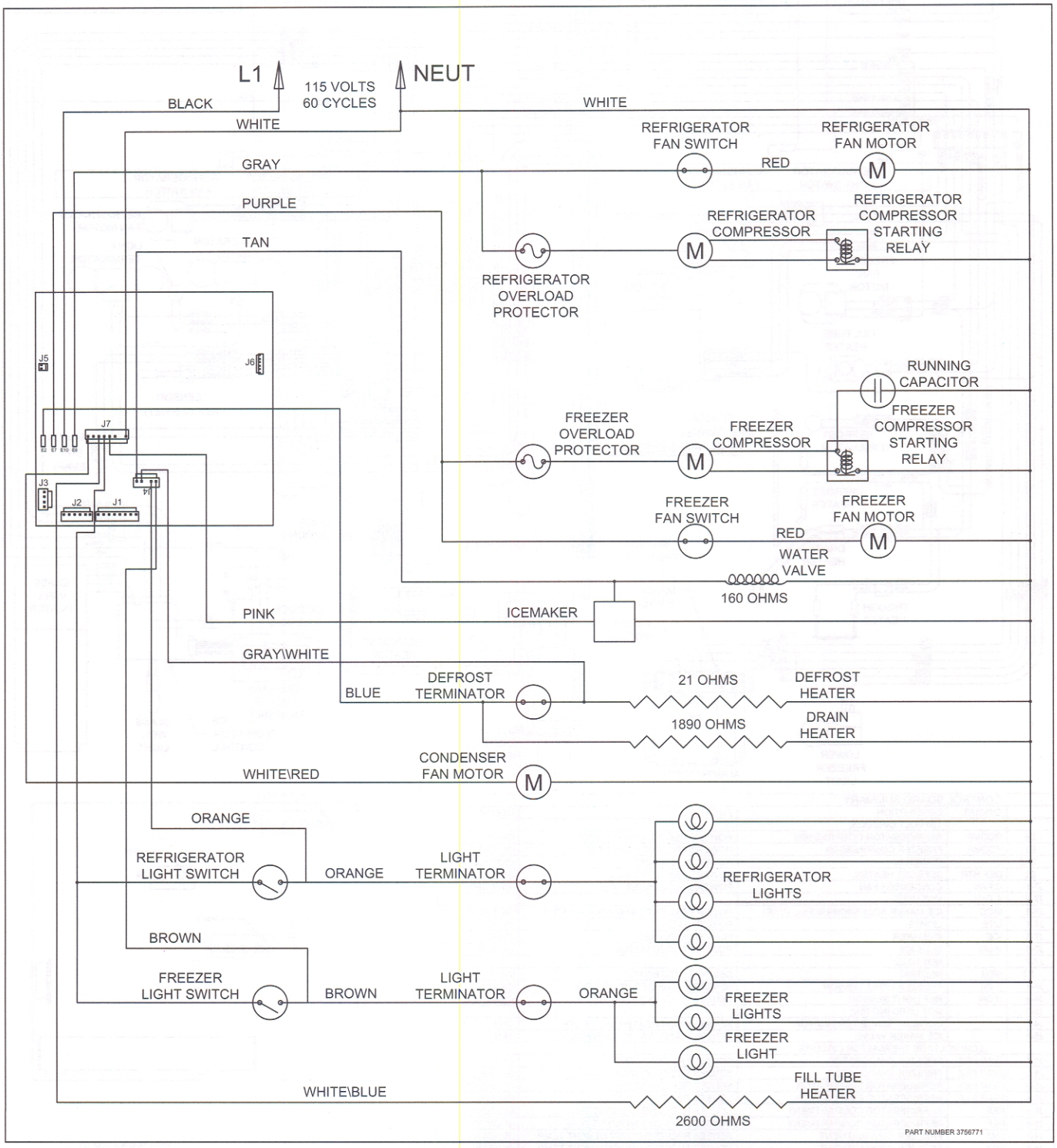

WIRING DIAGRAM MODEL 680

⚠ WARNING

This wiring information is provided for use by qualified service personnel only.

Disconnect appliance from electrical supply before beginning service.

Be sure all grounding devices are connected when service is completed.

Failure to observe the above warnings may result in severe electrical shock.

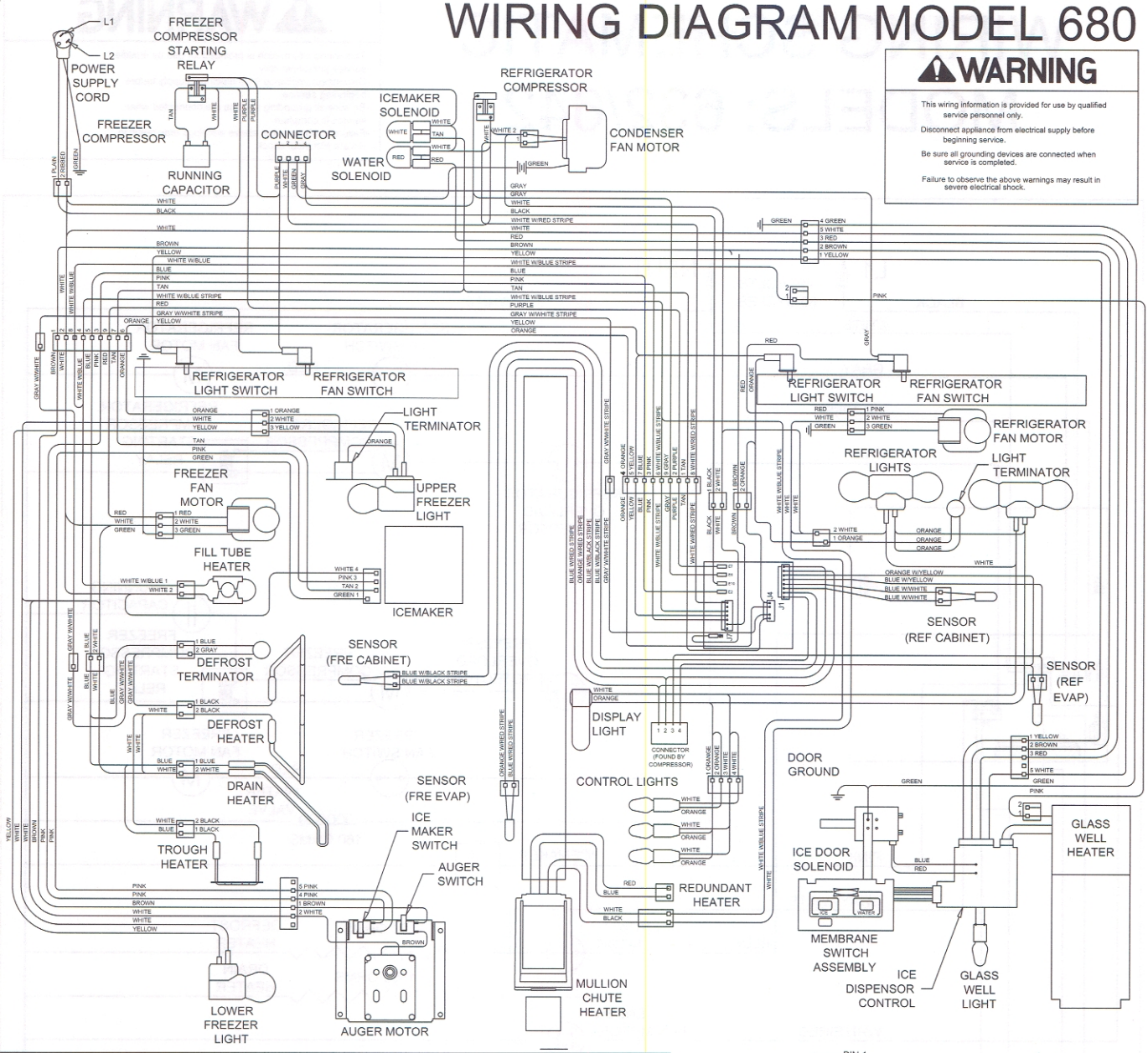

CONTROL BOARD SUMMARY				
	CIRCUIT	DESCRIPTION	FUNCTION	COLOR
		120 VOLT CIRCUITS		
E6	RCOMP	REFRIGERATOR COMPRESSOR	POWERS REFRIG. COMPRESSOR	GRAY
E7	FCOMP	FREEZER COMPRESSOR	POWERS FREEZER COMPRESSOR	PURPLE
E10	L1	POWER IN	POWER INTO BOARD	BLACK
E2	DEF HTR	DEFROST HEATER	POWERS DEFROST CIRCUIT	BLUE
J7-1	C FAN	CONDENSER FAN	POWERS CONDENSER FAN	WHT/RED
J7-2	E FAN	NOT USED		
J7-3	IACC	ICE MAKER ACCESSORIES(FILL TUBE)	POWERS FILL TUBE AND ACCESSORIES	WHT/BLUE
J7-4	LITE	LIGHTS	POWERS LIGHTS	YELLOW
J7-5	ICE	ICEMAKER	POWERS ICEMAKER	PINK
J7-6	IAUG	BULK ICE	POWERS AUGER MOTOR	BROWN
J7-7		NOT USED		
E1	NEU	NEUTRAL	NEUTRAL INTO BOARD	WHITE
J4-1	F DR	FREEZER LIGHT SENSOR	SENSES IF FREEZER DOOR OPEN	ORANGE
J4-2	R DR	REF LIGHT SENSOR	SENSES IF REF DOOR OPEN	ORANGE
J4-3		NOT USED (NO PIN)		
J4-4		DEFROST SENSE-TERMINATOR	SENSES WHEN HEATER SHUTS OFF	GRAY/WHT
J5-5		ICE MAKER VALVE	SENSES WATER VALVE ACTIVATION	TAN
		LOW VOLTAGE THERMISTOR CIRCUITS		
J1-1	EVAP FRZ	FREEZER EVAPORATOR	SENSES FRE EVAP TEMP	ORANGE/RED
J1-2	EVAP FRZ	FREEZER EVAPORATOR	SENSES FRE EVAP TEMP	BLU/RED
J1-3	EVAP REF	REFRIGERATOR EVAPORATOR	SENSES REF EVAP TEMP	ORANGE/YEL
J1-4	EVAP REF	REFRIGERATOR EVAPORATOR	SENSES REF EVAP TEMP	BLU/YEL
J1-5	REF	REFRIGERATOR COMPARTMENT	SENSES REF COMPARTMENT TEMP	BLU/WHT
J1-6	REF	REFRIGERATOR COMPARTMENT	SENSES REF COMPARTMENT TEMP	BLU/WHT
J1-7	FRZ	FREEZER COMPARTMENT	SENSES FREEZER COMPARTMENT TEMP	BLU/BLK
J1-8	FRZ	FREEZER COMPARTMENT	SENSES FREEZER COMPARTMENT TEMP	BLU/BLK

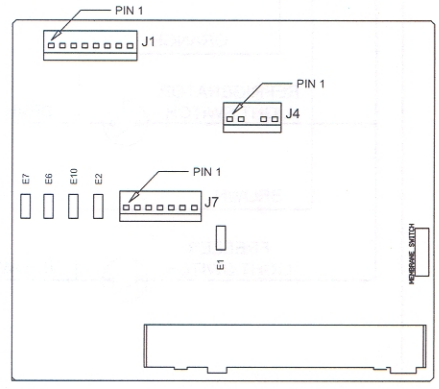

PART NUMBER 3756521

SCHEMATIC MODEL 680

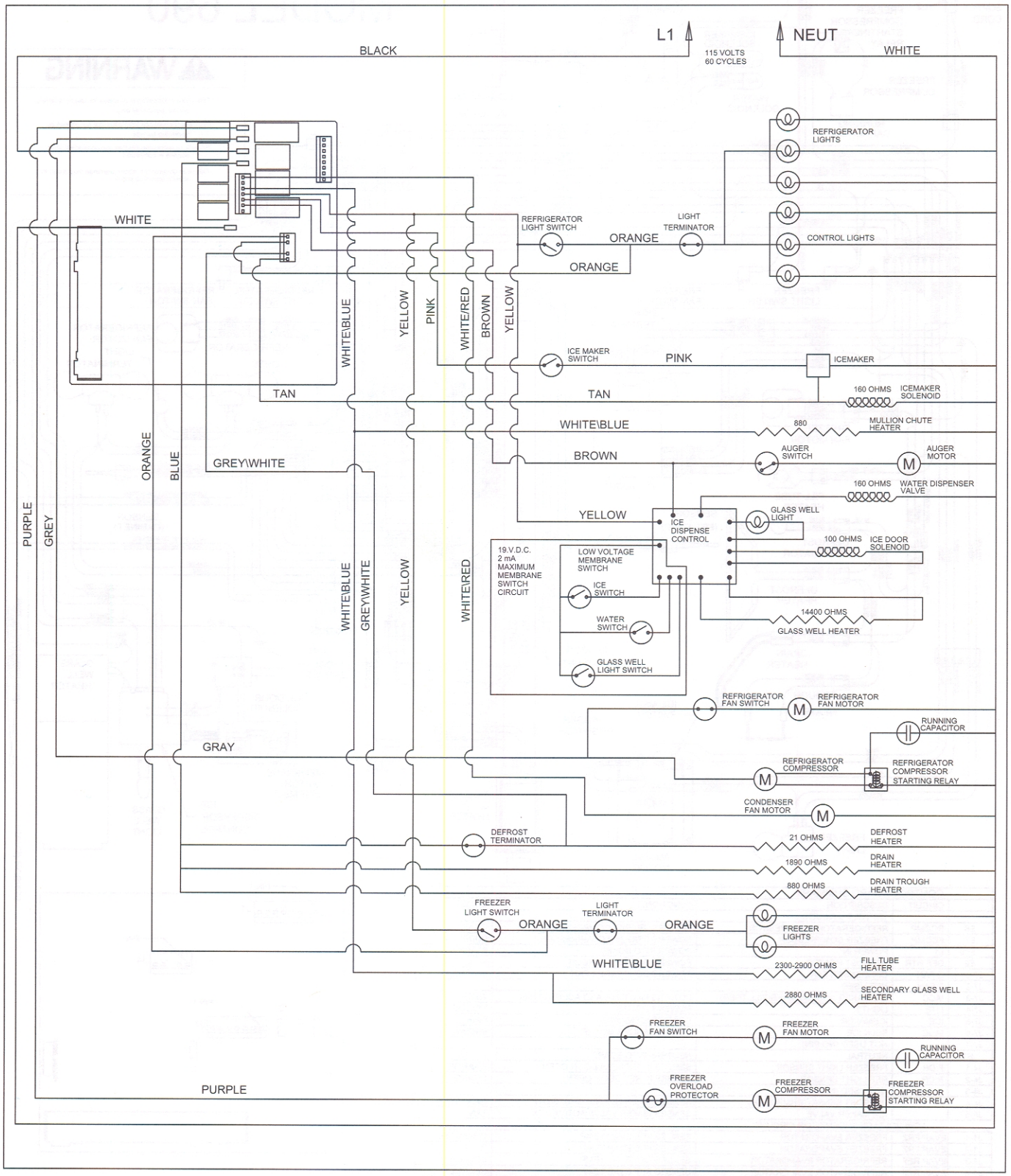

PART NUMBER 3756521

WIRING DIAGRAM MODEL 690

⚠ WARNING

This wiring information is provided for use by qualified service personnel only.

Disconnect appliance from electrical supply before beginning service.

Be sure all grounding devices are connected when service is completed.

Failure to observe the above warnings may result in severe electrical shock.

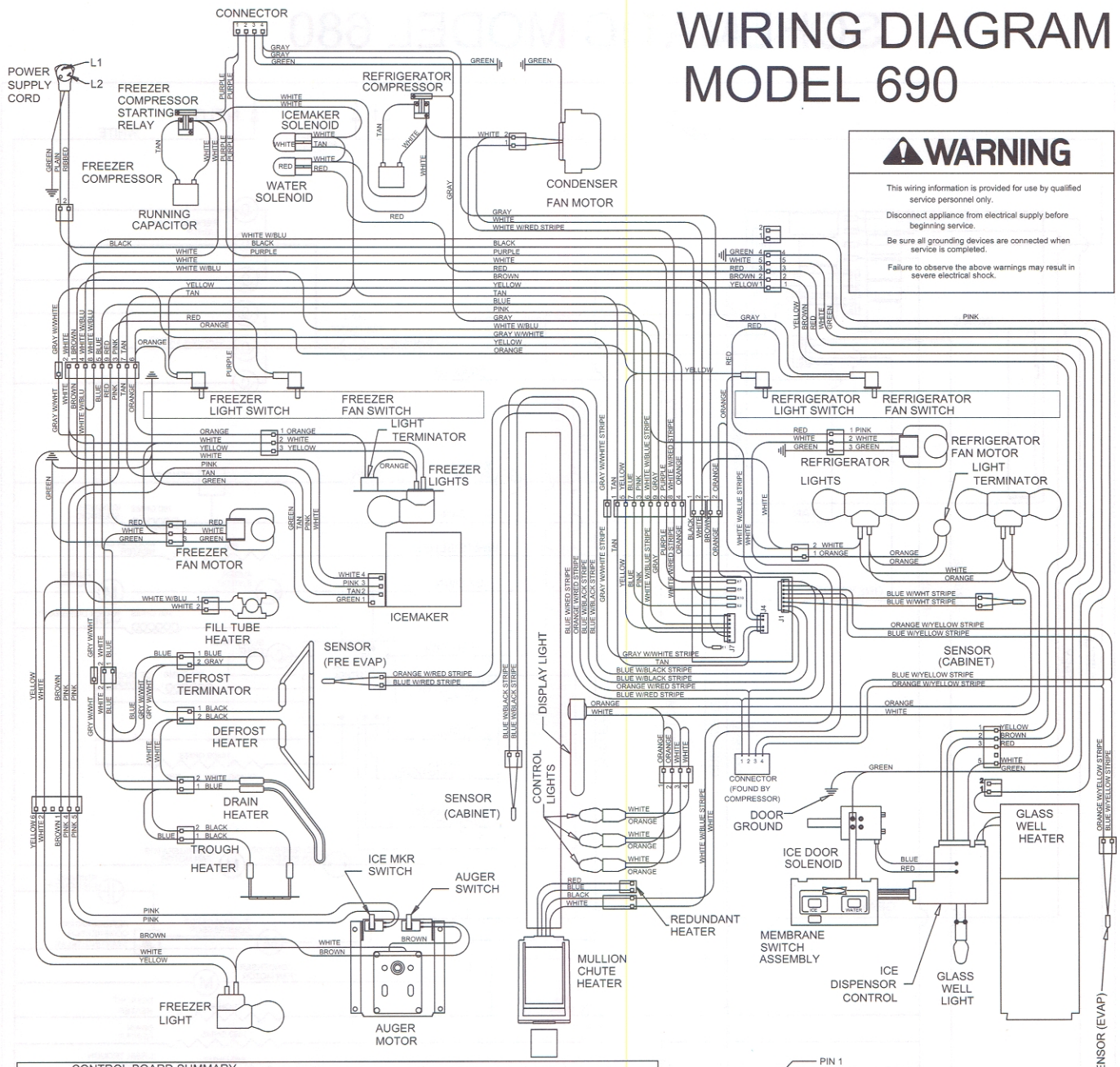

CONTROL BOARD SUMMARY				
	CIRCUIT	DESCRIPTION	FUNCTION	COLOR
		120 VOLT CIRCUITS		
E6	RCOMP	REFRIGERATOR COMPRESSOR	POWERS REFRIG. COMPRESSOR	GRAY
E7	FCOMP	FREEZER COMPRESSOR	POWERS FREEZER COMPRESSOR	PURPLE
E10	L1	POWER IN	POWER INTO BOARD	BLACK
E2	DEF HTR	DEFROST HEATER	POWERS DEFROST CIRCUIT	BLUE
J7-1	C FAN	CONDENSER FAN	POWERS CONDENSER FAN	WHT/RED
J7-2	E FAN	NOT USED		
J7-3	IACC	ICE MAKER ACCESSORIES(FILL TUBE)	POWERS FILL TUBE AND ACCESSORIES	WHT/BLUE
J7-4	LITE	LIGHTS	POWERS LIGHTS	YELLOW
J7-5	ICE	ICEMAKER	POWERS ICEMAKER	PINK
J7-6	IAUG	BULK ICE	POWERS AUGER MOTOR	BROWN
J7-7		NOT USED (NO PIN)		
E1	NEU	NEUTRAL	NEUTRAL INTO BOARD	WHITE
J4-1	F DR	FREEZER LIGHT SENSOR	SENSES IF FREEZER DOOR OPEN	ORANGE
J4-2	R DR	REF LIGHT SENSOR	SENSES IF REF DOOR OPEN	ORANGE
J4-3		NOT USED (NO PIN)		
J4-4		DEFROST SENSE-TERMINATOR	SENSES WHEN HEATER SHUTS OFF	GRAY/WHT
J5-5		ICE MAKER VALVE	SENSES WATER VALVE ACTIVATION	TAN
LOW VOLTAGE THERMISTOR CIRCUITS				
J1-1	EVAP FRZ	FREEZER EVAPORATOR	SENSES FRE EVAP TEMP	ORANGE/RED
J1-2	EVAP FRZ	FREEZER EVAPORATOR	SENSES FRE EVAP TEMP	BLU/RED
J1-3	EVAP REF	REFRIGERATOR EVAPORATOR	SENSES REF EVAP TEMP	ORANGE/YEL
J1-4	EVAP REF	REFRIGERATOR EVAPORATOR	SENSES REF EVAP TEMP	BLU/YEL
J1-5	REF	REFRIGERATOR COMPARTMENT	SENSES REF COMPARTMENT TEMP	BLU/WHT
J1-6	REF	REFRIGERATOR COMPARTMENT	SENSES REF COMPARTMENT TEMP	BLU/WHT
J1-7	FRZ	FREEZER COMPARTMENT	SENSES FREEZER COMPARTMENT TEMP	BLU/BLK
J1-8	FRZ	FREEZER COMPARTMENT	SENSES FREEZER COMPARTMENT TEMP	BLU/BLK

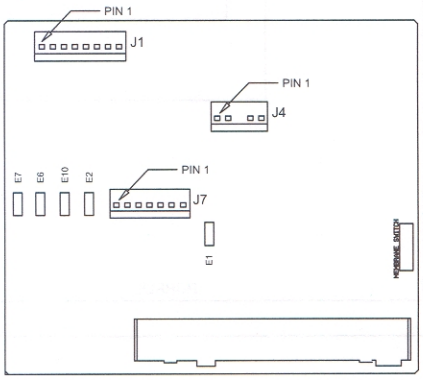

PART NUMBER 3756522

SCHEMATIC MODEL 690

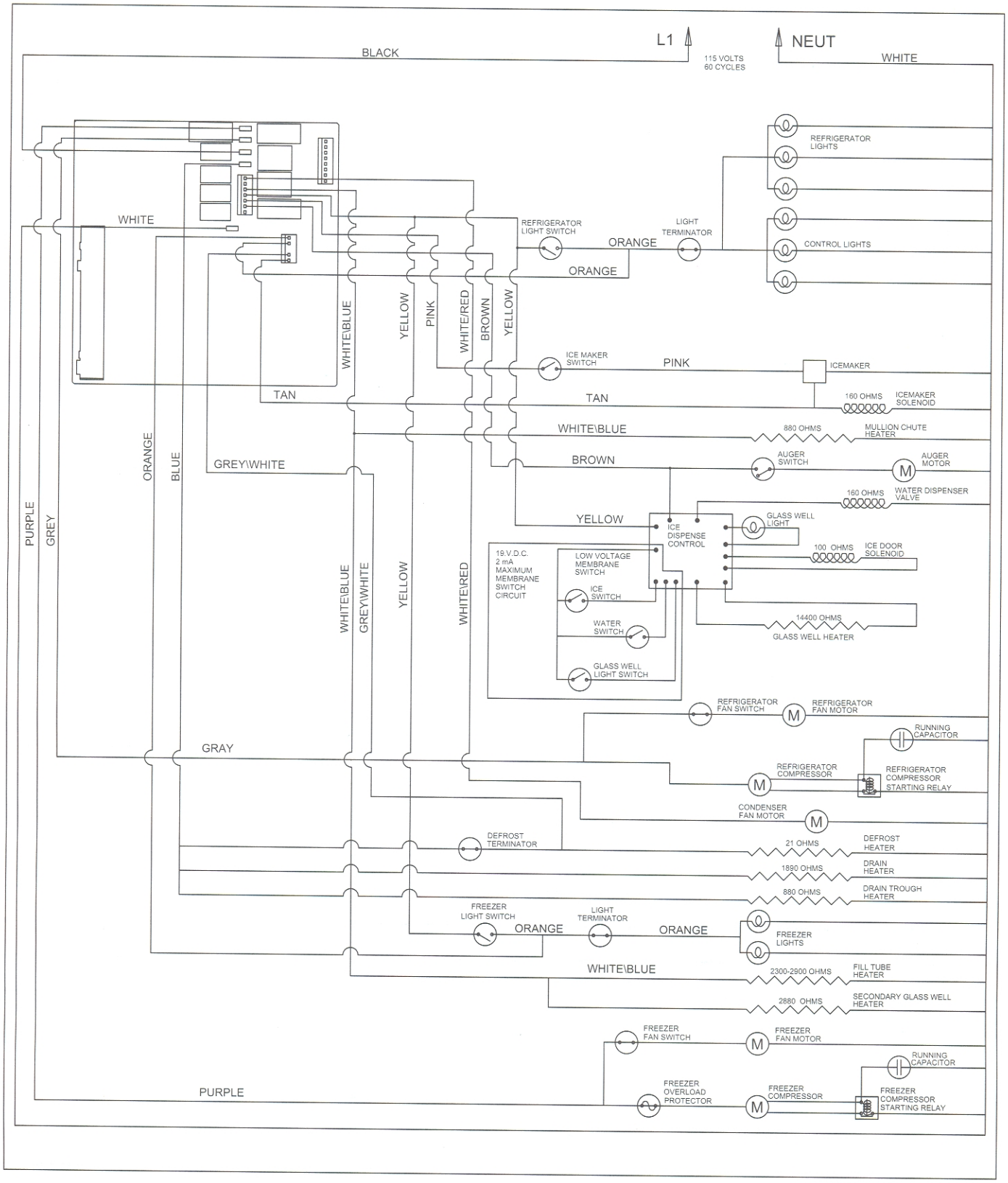

PART NUMBER 3756522