Scotsman®

Service Manual for Residential Ice Machine

Models SCCG50 and SCCP50

Brilliance™

SCCG50 & SCCP50
Service Manual

Introduction:

This ice machine is the result of Scotsman's decades of experience as an industry leader in the design and manufacture of both commercial and residential ice machines.

This manual includes the information needed to install, start up and maintain the ice machine. Note any Caution or Warning indicators, as they provide notice of potential hazards. Keep this manual for future reference.

Table of Contents

Specifications . . . . . Page 2
Cabinet Layout . . . . . Page 3
Air flow. . . . . Page 4
Water Quality . . . . . Page 5
Door Covering . . . . . Page 6
Door Panel Attachment . . . . . Page 7
Custom Panel . . . . . Page 8
Door swing change . . . . . Page 9
Installation: Water & Drain. . . . . Page 10
Gravity Drain. . . . . Page 11
Electrical. . . . . Page 12
Cube Size Adjustment. . . . . Page 13
Harvest Time Adjustment . . . . . Page 14
Control Settings . . . . . Page 15
Use . . . . . Page 16
How to clean the condenser and winterize . . . . . Page 17
How to remove scale from the ice making system . . . . . Page 18
System Information . . . . . Page 19
Water System . . . . . Page 20
Components. . . . . Page 21
Controller . . . . . Page 22
Performance Information . . . . . Page 23
Refrigeration System . . . . . Page 24
Thermistor Values . . . . . Page 25
Service Diagnosis . . . . . Page 26
Service Diagnosis . . . . . Page 27
Removal and Repair. . . . . Page 28
Removal and Repair. . . . . Page 29
Removal and Repair - Cabinet Removal . . . . . Page 30
Refrigeration Service . . . . . Page 32

Specifications

This ice machine is designed to be used indoors, in a controlled environment. It can be used in a wide variety of environmental conditions, but there are limits. Use outside of the listed limitations is misuse and will void the warranty.

Air temperature limits:

The ice machine will operate adequately within the limits, but functions best in temperatures between 70 and 80 degrees F.

- Minimum – 50 degrees F. (10°C)
- Maximum – 100 degrees F. (38°C)

Water temperature limits:

- Minimum – 40 degrees F. (4.5°C)
- Maximum – 100 degrees F. (38°C)

Water pressure limits:

- Minimum – 20 psi (1.4 bar)
- Maximum – 80 psi (5.5 bar)

Because the ice machine is making a food product, the water supply to the ice machine must be potable, or fit for human consumption.

Electrical

- 115 volt, 60 Hz. Plug into dedicated 15 amp circuit.
- Power consumption: 275 - 400 Watts. Varies during Freeze and Harvest cycles.

Voltage limits:

- Minimum - 104 volts
- Maximum – 126 volts

Options:

Door Panel kits: Finished door panels are available from Scotsman for attachment to the machine, or a custom panel can be made.

Kit Number	Panel Finish	Handle Finish
KDFW	White	White
KDFWS	White	Stainless Steel
KDFB	Black	Black
KDFBS	Black	Stainless Steel
KDFS	Stainless Steel	Stainless Steel

Kickplate Extension: In some situations the leg levelers will be extended enough to become visible. A kit to extend the kickplate over the legs is **KKPF**.

Cabinet Stability: In some free standing installations it may be prudent to add a bracket that secures the back of the cabinet to a wall. That kit number is **KATB**.

Drain Conversion:

A gravity drain model can be converted to a drain pump model by installing a drain pump kit. The drain pump kit consists of a drain pump, wiring harness and associated tubing. The kit number is A39462-021.

Warranty Information

Warranty information is supplied separately from this manual. Refer to it for coverage. In general, the warranty covers defects in materials or workmanship and does not cover corrections of installation errors or maintenance.

Models: All are air cooled (A series began 8/09):

- SCCP50MA-1WU – Pump model, white cabinet - discontinued 2013
- SCCG50MA-1WU – Gravity drain model, white cabinet - discontinued 2013
- SCCP50MA-1BU – Pump model, black cabinet - discontinued 2013
- SCCG50MA-1BU – Gravity drain model, black cabinet - discontinued 2013
- SCCP50MA-1SU – Pump model, stainless cabinet, unfinished door
- SCCG50MA-1SU – Gravity drain model, stainless cabinet, unfinished door
- SCCP50MA-1SS – Pump model, stainless cabinet and door
- SCCG50MA-1SS – Gravity drain model, stainless cabinet and door

Cabinet Layout

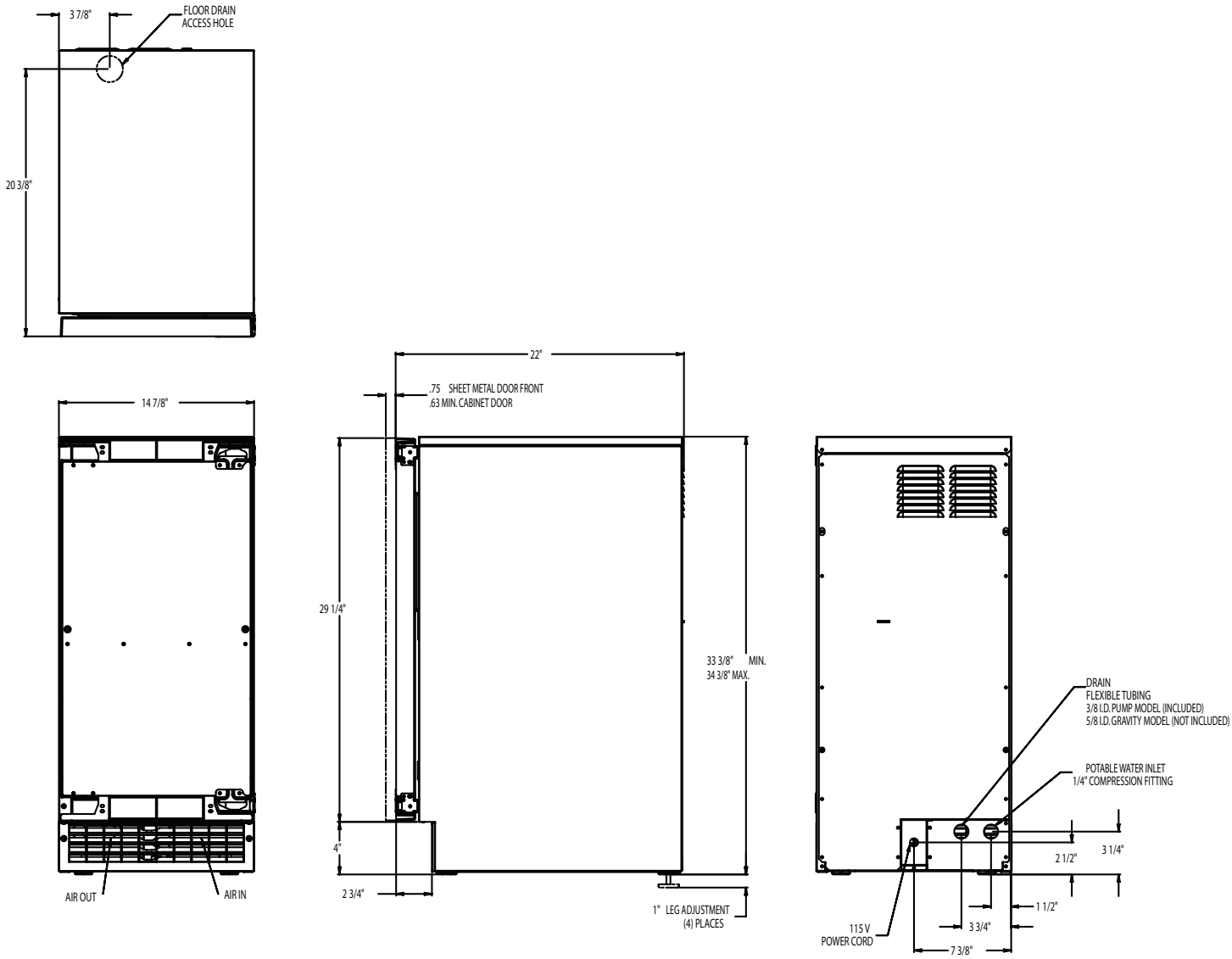

Air flow

The machine takes in room temperature air at the lower right front and forces warm air out the lower left front. Restricting the airflow will adversely affect the ability of the ice machine to make ice.

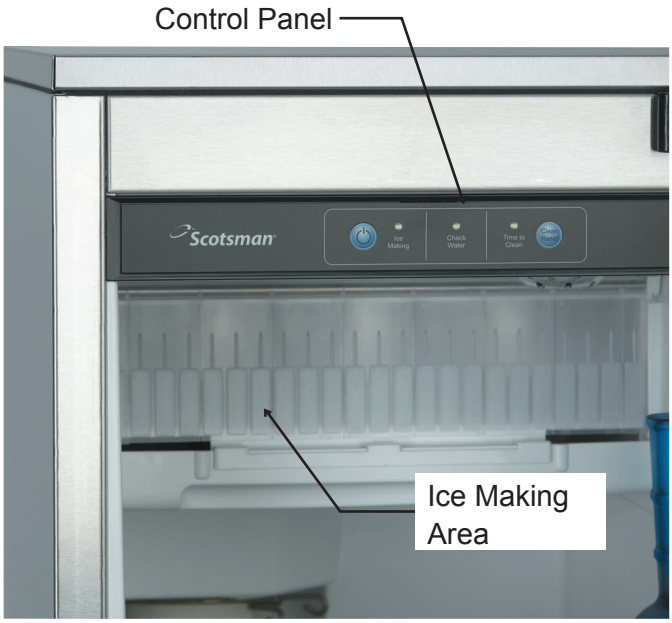

Scotsman Ice Systems are designed and manufactured with the highest regard for safety and performance. They meet or exceed the standards of agencies like U.L.

Scotsman assumes no liability or responsibility of any kind for products manufactured by Scotsman that have been altered in any way, including the use of any parts and/or other components not specifically approved by Scotsman.

Scotsman reserves the right to make design changes and/or improvements at any time.

Specifications and designs are subject to change without notice.

Water Quality

All water, including potable water supplied by municipalities, contains some impurities or minerals. Water absorbs impurities from the air as rain and/or as it flows through the ground. Some of the impurities are solid particles, these are known as suspended solids, and a fine particle filter will remove them. Other impurities are chemically bonded to the water molecules, and cannot be filtered out, these are called dissolved solids.

Ice made by this machine will have a lower mineral content than the water it was made from. This is due to the method of making ice. Purer water will freeze first in the ice making molds. The reason for this is that anything dissolved in water lowers the water's freezing temperature. This concentrates most of the impurities in the ice machine water reservoir where they may form hard deposits known as scale. The machine dilutes the concentration of minerals by over-filling the reservoir during the harvest cycle (with the excess water flowing down the drain). s. Between 2 and 4 pints of water flow into the unit each cycle. Between 1 and 3.5 pints of that rinses the reservoir and goes down the drain.

Some impurities will inevitably remain, and will stick to the parts in the machine, and will cause malformed ice cubes. Eventually, **built up mineral scale can shorten machine life**.

To keep the machine operating properly, these impurities or minerals will have to be regularly dissolved by an acid cleaning, using Scotsman Ice Machine Scale Remover. Directions for this may be found in the section under cleaning.

Filters and Treatment

In general, it is always a good idea to filter the water. A water filter, if it is of the proper type, can remove taste and odors as well as particles. Some methods of water treatment for dissolved solids include reverse osmosis, and polyphosphate feeders.

RO Water

This machine can be supplied with Reverse Osmosis water, but the water conductivity must be no less than 10 microSiemens/cm. A reverse osmosis system should include post treatment to satisfy the R.O. water's potential aggressiveness. Deionized water is not recommended.

Because water softeners exchange one mineral for another, softened water may not improve water conditions when used with ice machines. Where water is very hard, softened water could result in white, mushy cubes that stick together.

If in doubt about the water, contact a local point of use water specialist for recommendations on water treatment.

Installation Overview

The ice machine must:

- be connected to cold, potable water
- be connected to a drain
- be connected to the proper power supply
- be able circulate air through the vents at the front.

Note: Do not build in so that the door is recessed.

Door Covering

Door Panel

The ice machine is supplied without a conventional door covering so it can be decorated to the user's preference. Scotsman offers several coverings including white, black and stainless steel. In addition, a custom built panel can be placed onto the door.

Door Panel Attachment

To attach a Scotsman supplied panel:

Note: If door swing is to be changed, it must be done before panel is attached.

The panel will be held on by 6 sheet metal screws and 2 machine screws.

1. Remove the gasket and retain for later use.

2. If the door panel is stainless steel, remove any plastic covering the stainless steel panel.

3. Place the panel onto the outside of the door, and secure it to the door using two machine screws, located at the left center and right center.

4. Fasten the panel to the door using the 6 sheet metal screws. In the hinge area, use the outermost screw holes.

5. Place the covers over the hinge areas, and secure each cover to the door using a sheet metal screw.

6. Insert hole plug over screw installed in step 5.

7. Return the gasket to its original position.

Custom Panel

A custom panel of wood or other material not exceeding 15 lb can be attached to the door. Attachment is from the ice side of the door. Holes are provided in the door for this purpose.

See instructions in information packet to create and attach a custom panel:

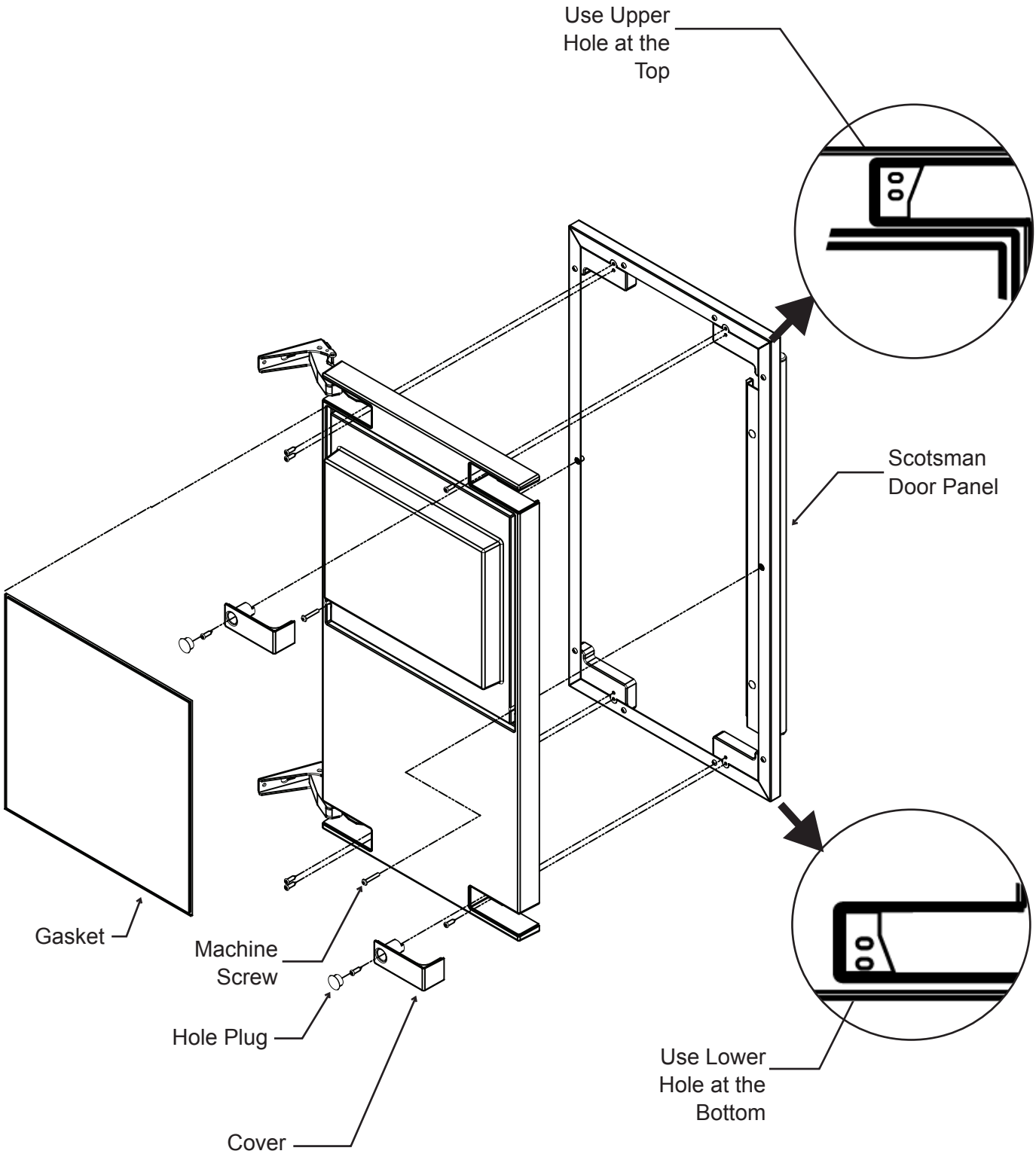
Use Upper Hole at the Top
Scotsman Door Panel
Gasket
Machine Screw
Hole Plug
Cover
Use Lower Hole at the Bottom

Custom Panel

A custom panel of wood or other material not exceeding 15 lb can be attached to the door. Attachment is from the ice side of the door. Holes are provided in the door for this purpose.

To create and attach a custom panel:

- Panel width: 14 7/8”
- Panel height: Between 29 3/8” and 30 3/8”.
- Panel thickness: 5/8” to ¾”

1. Measure overall height of cabinet opening where ice machine will be (floor to bottom of countertop edge).

2. Determine desired kickplate space (from bottom of door to floor). This could be equal to the adjacent cabinet’s kickplate space or another space the user wants.

3. Subtract kickplate space from cabinet opening.

4. Subtract 1/8 or more for clearance space between top of door and bottom of countertop edge from cabinet opening. This is the maximum door length.

5. Cut panel to width.

6. Cut panel to length (cabinet space - kickplate space - top clearance = length).

7. Determine top of panel.

8. Mark hole locations using drawing on the back of these instructions. Drawing assumes top of panel will be flush with top of door. Measure hole locations from the top of the panel.

9. Drill pilot holes for wood screws. Use drill stop to prevent drilling through the panel.

10. Mount panel to door using wood screws or supplied panel mounting screws.

Note: When installed Ice machine must be adjusted for height to position top of door to desired clearance.

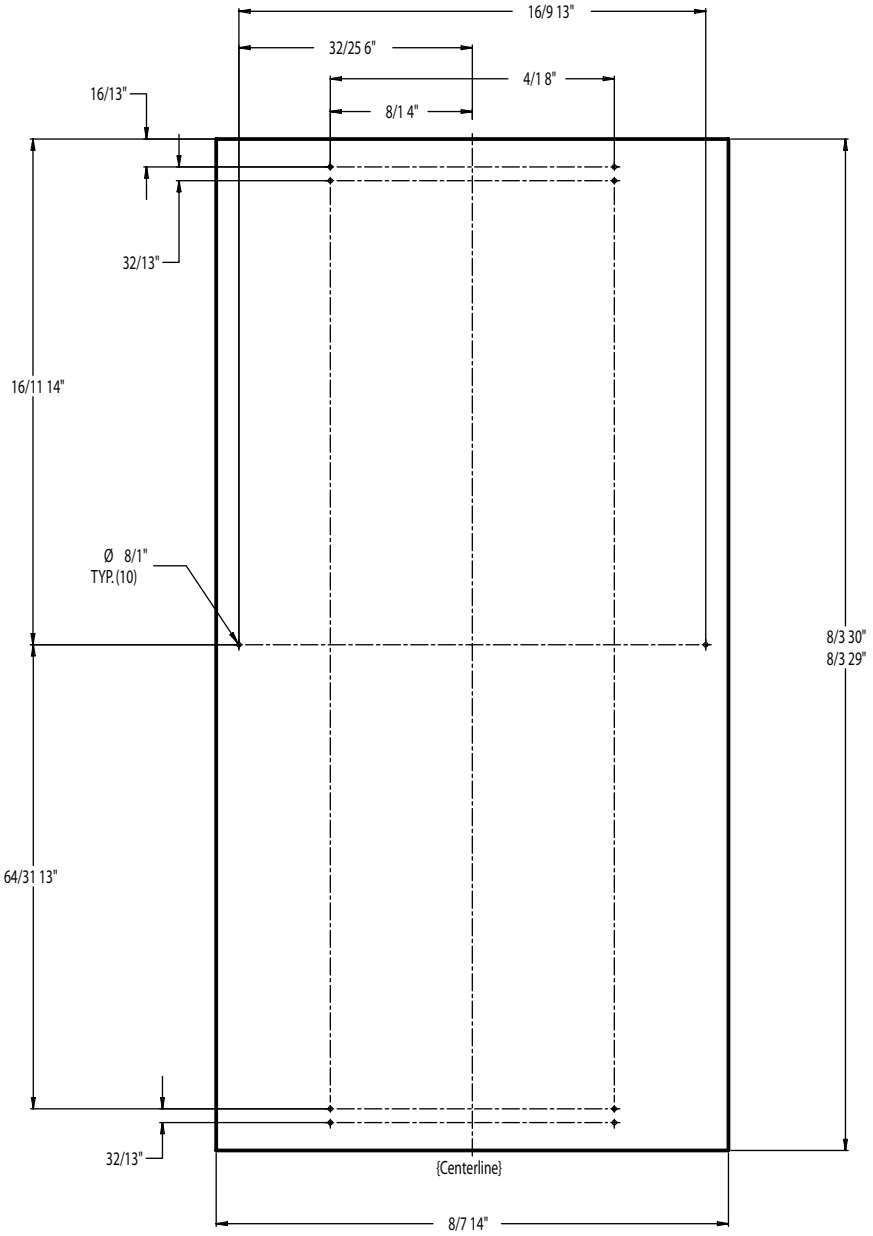

Door swing change

Note: Prior models had separate hinge brackets and different directions to change swing.

Moving the hinges allows the door to open from either the left or right side. Change swing before attaching door panel.

To change:

1. Remove innermost screw holding each hinge to cabinet, loosen the other.

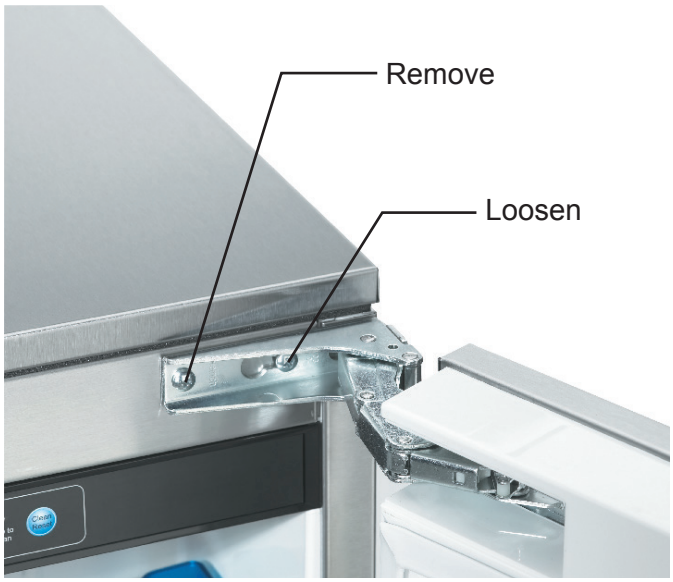

2. Slide door to the side and remove from cabinet.

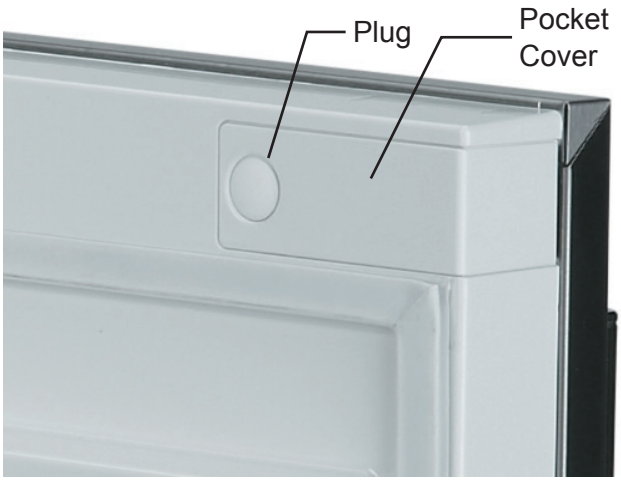

3. Remove plug and hinge pocket covers from door.

Note: There are either plugs or screws in the holes where the hinges will mount. They must be moved.

4. Remove hole plugs or screws from unit's new hinge locations, set aside.

5. Move screws loosened in step 1 to opposite location.

6. Install screws or plugs removed in step 4 to the unit's original hinge location to fill the holes.

7. Remove the upper hinge from the door and move it to the door's opposite side, bottom location. Secure using the original screws.

Note: If door panel is attached, it must be removed to access hinge screws and to reverse handle position.

8. Remove the original lower hinge and move it to the door's opposite side, upper location. Secure using the original screws.

9. Install pocket covers and hole plugs onto door.

10. Attach the door to the cabinet using the original screws.

Installation Notes

Built In Situations: If a finished floor is to be installed in the area after the ice machine has been built in, shims the expected thickness of the floor should be installed under the unit to keep the machine level with the planned floor level.

Installations on a slab: Use a pump model and pump the water to the point of drainage. Pump models will pump 1 story (10 feet) high.

Installations over a crawl space or basement: Either gravity drain or pump model units may be used, if there is not enough room behind the machine for a drain/waste receptacle, the drain will have to be below the floor.

Note: When installed in a corner, the door swing may be limited due to handle contact with the wall or cabinet face.

Installation: Water & Drain

Water Supply, all models: The recommended water supply tubing is ¼ inch OD copper. Stainless steel flex or reinforced PVC tube may also be used. Install an easily accessible shut-off valve between the supply and the unit. This shut-off valve should not be installed behind the unit.

Note: Do not use self-piercing type valves.

1. Remove the front service panel.

2. Route the tubing through the right hole in the back to the inlet water solenoid valve inlet.

3. Install a compression fitting on the tubing and connect to the inlet of the solenoid.

Drains

There are two types of ice machine models, one that drains by gravity and one that has an internal drain pump.

Drain Pump Model drain installation

1. Locate the coil of 3/8” ID plastic drain tubing secured to the back of the unit.

2. Route the plastic drain tube from the back of the unit to the drain connection point.

IMPORTANT NOTE: Often an air gap is required by local codes between the ice maker drain tube and the drain receptacle.

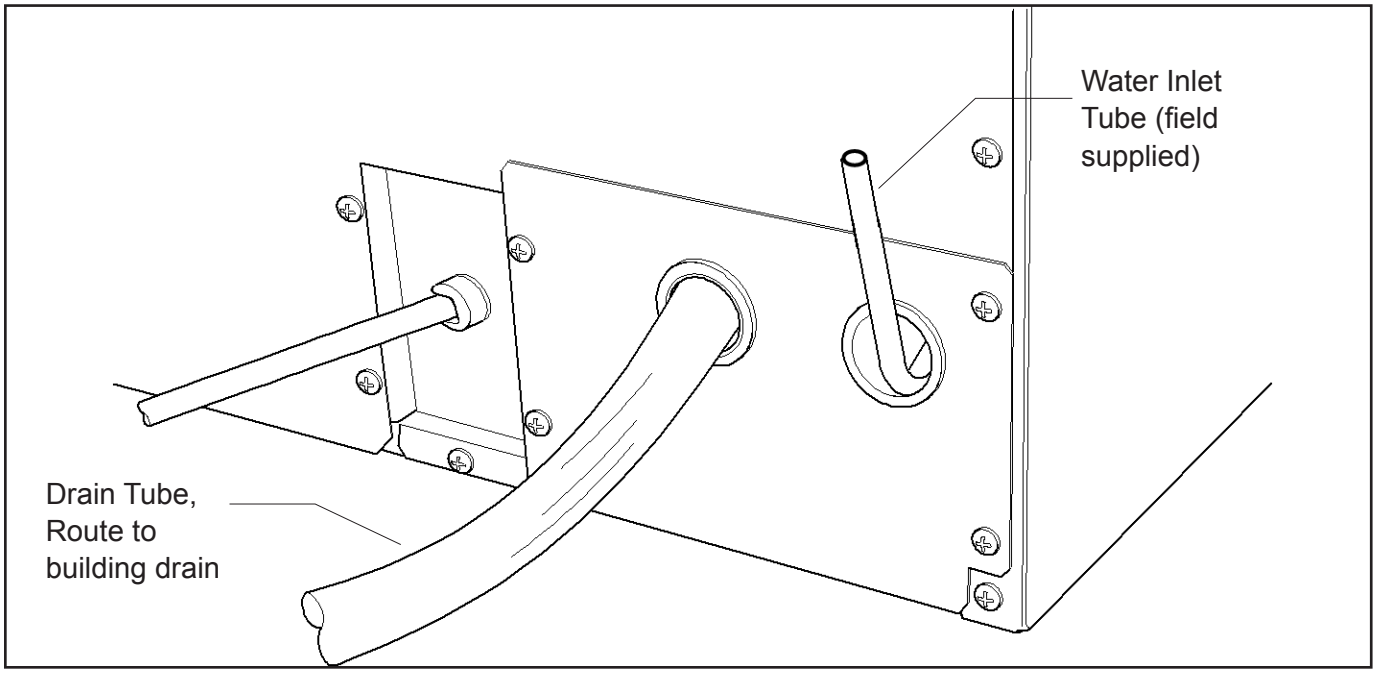

Back View, Drain Pump Model

Gravity Drain

Caution: Restrictions in the drain system to the machine will cause water to back up into the ice storage bin and melt the ice. Gravity drain tubing must be vented, have no kinks and slope to the building drain. Air gaps are typically required by local code.

1. Place the ice machine in front of the installation opening. Adjust leveling legs to the approximate height.

2. Remove the front service access panel and the upper back panel.

Note: If you are connecting a gravity drain model and the drain opening has been located in the floor under the base pan according to the pre install specifications, follow steps 3 through 5 to drain the unit through the base. If not, proceed to step 6b.

3. Remove the clamp and barbed elbow and take off the plastic cover in the base pan below the drain hose.

4. Connect a straight 5/8” barbed connector to the drain hose, securing with the clamp removed in step 4.

5. Cut an 8” piece of 5/8” ID X 7/8” OD tygon (clear plastic) tubing. Slide one end of the tube onto the outlet of the barbed connector and secure with a clamp. Leave the other end of the tube lying on the floor of the base pan until the unit is positioned over the floor drain.

6. Route the drain tube. Either a) Insert the drain tube through the base pan into the floor drain or b) Route the drain tube through the left hole in the lower back panel and connect to barbed elbow and secure with a clamp.

7. Reinstall the upper back panel.

8. Reinstall the service access panel. Level the unit.

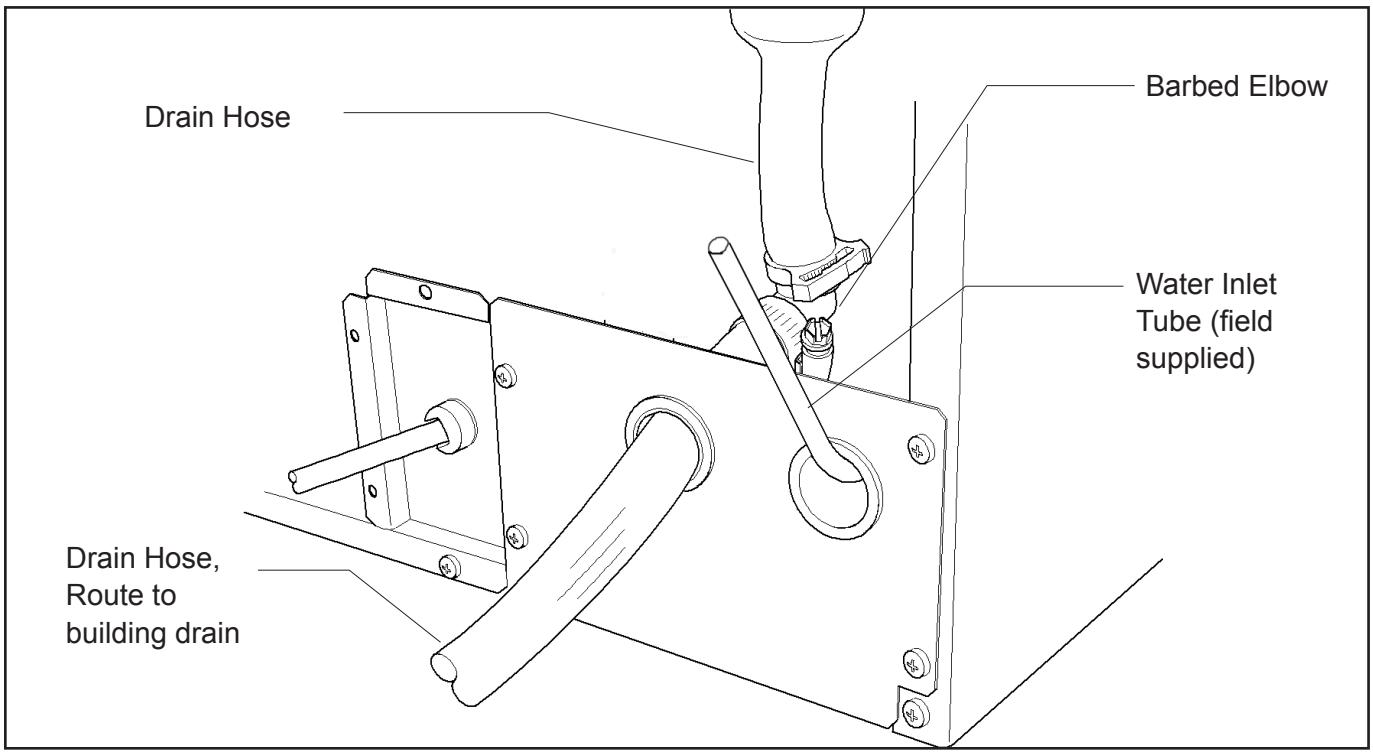

Back View, Gravity Drain Model

Electrical

The ice machine is supplied with a power cord. Do not remove the grounding pin from the cord's plug. Do not use extension cords. Follow all codes. Connect the machine to its own 115 volt, 15 amp circuit.

1. If the electrical outlet for the ice maker is behind the unit, plug in the unit.

2. Position the unit in the installation opening.

3. Turn on the water supply. Make sure that the ice maker is plugged in and the power is on.

4. Slide unit into installation opening, paying careful attention to water supply and drain connections. Do not kink!

5. Pour a couple of quarts of water into the ice storage bin; on drain pump equipped machines the drain pump should start and water should pump out. Check for leaks.

6. Replace the service access panel.

7. Level the unit as needed.

Installation check list:

1. Has the unit been connected to the proper water supply?

2. Has the water supply be checked for leaks?

3. Has the unit been connected to a drain?

4. Has the drain been tested for flow and leaks?

5. Has the unit been connected to the proper electrical supply?

6. Has the unit been leveled?

7. Have all packing materials been removed from the machine?

8. Has the door covering been installed?

Initial Start Up

1. Turn on the water supply.

2. Switch on the electrical power.

3. Push and release the On/Off switch to start the machine. The Ice Making light next to the On/Off switch will glow Green.

4. Water will begin to flow into the unit. When the reservoir is full, water will start to drain from the machine. After a few minutes the compressor, water pump and fan motor will begin to operate and the first ice making cycle will have begun.

No adjustments are needed.

After about a half hour, ice will fall into the ice storage bin. The machine makes 24 cubes per batch. It is normal for the first batches of ice to melt, that continues until the bin has cooled. It will take 8 to 10 hours of continuous run time to fill the ice bin. When the bin is full of ice, the ice machine will shut off. It will automatically restart when the ice level falls, either from use or normal meltage.

Cube Size Adjustment

The cube size can be adjusted by changing the amount of freeze cycle time. This is done by a button press sequence.

Note: There is only one correct cube size. See the illustrations.

To adjust cube size:

1. Shut the machine off: If it's off on bin full press and release the On/Off button once, switching the Ice Making light off. If the machine is making ice hold the On/Off button in until the Ice Making light is off.

2. Press and hold the Clean button for 5 seconds (light on), then release (light out)

3. View the lights. Compare to the table below.

Cube Size Change Table

	On/Off	Water	Clean
Default	off	off	off
Add 1 minute	on	off	off
Add 2 minutes	off	on	off
Add 3 minutes	off	off	on
Add 4 minutes	on	on	on
- 1 minute	flash	off	off
- 2 minutes	off	flash	off
- 3 minutes	off	off	flash
- 4 minutes	flash	flash	flash

4. Select the amount of change.

5. Push and release the On/Off button until the correct light pattern is displayed.

6. Push and release the Clean button to select that setting.

7. Push and release On/Off to return to ice making.

Side Views of Cubes

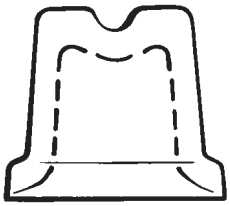

Too Small, Adjust Cycle Longer

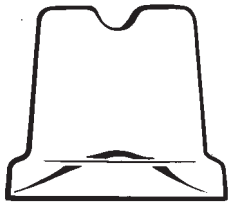

Just Right

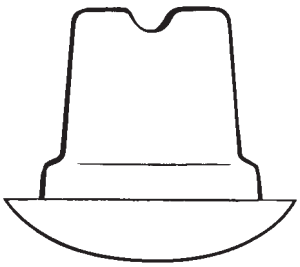

Too Large, Adjust Cycle Shorter

Harvest Time Adjustment

The harvest time can be adjusted so that all the ice harvests during the cycle, plus a few seconds extra. This is done by a button press sequence.

Note: Do not set harvest time shorter than the actual time it takes to release all the cubes.

To adjust Harvest Time:

1. Shut the machine off by holding the On/Off button in until it shuts off (Ice Making light off).

2. Press and hold the On button again for 5 seconds, then release (Ice Making light will switch off).

3. View the lights. Compare to the table below.

Harvest Time Table

	On/Off	Water	Clean
Default	off	off	off
Add 10 seconds	on	off	off
Add 20 seconds	off	on	off
Add 30 seconds	off	off	on
Add 40 seconds	on	on	on
- 10 seconds	flash	off	off
- 20 seconds	off	flash	off
- 30 seconds	off	off	flash
- 40 seconds	flash	flash	flash

4. Select the amount of change.

5. Push and release the Clean button until the correct light pattern is displayed.

6. Push and release the On button to select that setting.

7. Push and release On/Off to return to ice making.

Automatic water purge enable / disable

The control is set at the factory to automatically select the proper amount of water purge. If desired, that can be disabled, and a typical purge amount used.

To disable Automatic purge selection:

1. Press and hold the On/Off button until the unit shuts off. No lights should be on.

2. Press and hold the ON button for 5 seconds, then release.

3. Wait between 5 and 20 seconds, then repeat step 1. All lights will flash once.

To return to Automatic purge selection:

1. Press and hold the ON button for 5 seconds, then release.

2. Wait between 5 and 20 seconds, then repeat step 1. All lights will flash twice.

Manual Harvest - from the OFF or Standby Mode (powered but no lights are on)

1. Press and hold the Clean-Reset button for 5 seconds and release.

2. Wait between 5 and 20 seconds, then repeat step 1. All lights will flash once. The On/Off light will be on until harvest has timed out.

Reset time to clean indicator light

Press and hold the Clean-Reset button for 3 seconds.

Use

No special instructions are needed for use. Just take as much ice as you need, the machine will replace it. A scoop is provided, and it can be stored in the machine using the loop of tubing on the right side as a holder.

The machine can be shut off anytime by just pushing and releasing the On/Off button. The machine will shut off at the end of the next cycle. To shut off immediately, push and hold the On/Off button in until the machine stops.

What shouldn't be done?

Never keep anything in the ice storage bin that is not ice. Objects like wine or beer bottles are not only unsanitary, but the labels can slip off and plug up the drain.

Never allow the machine to operate without regular cleaning. The machine will last longer if it is kept clean. Regular cleaning should happen at least once per year, and preferably twice. Some water conditions will dictate even more frequent cleaning of the ice making section, and some carpets or pets will dictate more frequent cleaning of the condenser.

Note: The Time to Clean light will switch ON after 6 months of use. It will remain ON until the ice making system is cleaned using the process on page 18.

Noise:

The ice machine is designed for quiet operation, but will make some noise during the ice making cycle. During a freezing cycle, it is normal to hear the fan moving air and the water pump circulating water. Ice hitting the bin or ice in the bin can be heard during harvest.

If ice making noise is objectionable, an appliance grade timer can be added to the power supply. Set the timer to turn the machine off at the time(s) of day when the noise is most objectionable.

Normal cubes are tapered cylinders. If the cubes are ragged and mis-shaped, mineral scale must be removed from the ice making system

Maintenance

There are 5 things to keep clean:

1. The outside cabinet & door.
2. The ice storage bin.
3. The condenser.
4. The ice making system.
5. The ice scoop.

How to clean the cabinet.

Wipe off any spills on the surface of the door and handle as they occur. If anything spilled on the door or gasket dries onto the surface, wash with soap and warm water to remove.

How to clean the ice storage bin.

The ice storage bin should be sanitized occasionally. It is usually convenient to sanitize the bin after the ice making system has been cleaned, and the storage bin is empty.

A sanitizing solution can be made of 1 ounce of household bleach and two gallons of hot (95°F. – 115°F.) water. Use a clean cloth and wipe the interior of the ice storage bin with the sanitizing solution, pour some of the solution down the drain.

Allow to air dry.

Condenser cleaning

The condenser is like the radiator on a car, it has fins and tubes that can become clogged with dirt and lint. To clean:

1. Remove the kickplate and front service panel.

2. Locate the condenser surface.

3. Vacuum the surface, removing all dust and lint.

Caution: Do not dent the fins.

4. Return the kickplate and front service panel to their original positions. Fasten them to the cabinet using the original screws.

Winterizing

1. Clean the ice making system.

2. Open the door and push and release the On/Off switch to turn the machine off.

3. Turn off the water supply.

4. Drain the water reservoir by removing the rubber cap under the reservoir or black drain pulg it's near the back wall of the ice storage bin.

5. Disconnect the incoming water line at the inlet water valve.

6. Open the door, push and release the on/off switch to turn the machine on.

7. Blow air through the inlet water valve; a tire pump could do the job.

8. Drain pump models should have about 1/2 gallon of RV antifreeze (propylene glycol) poured into the ice storage bin drain.

Note: Automotive antifreeze must NOT be used.

9. Switch off and unplug the machine.

How to remove scale from the ice making system

1. Scoop out all of the ice, either discard it or save it in an ice chest or cooler.

2. Press and HOLD the On/off button in for 3 seconds until the Green light goes out.

3. Press and HOLD the both the Clean-Reset and On/Off buttons for 5 seconds. The Time to Clean light will blink on and off.

4. Pour 8 ounces of Scotsman Ice Machine Scale Remover (available from a local Scotsman Distributor or Dealer) into the ice machine reservoir.

Pour Scale Remover Here

5. Operate the machine for about ½ hour.

6. Push and release the On/Off switch. The machine will begin to flush out the cleaning solution.

7. Operate the machine for another ½ hour.

8. Push and release the On/Off switch. The machine will stop the cleaning process.

9. Pour a gallon of hot (95°F. – 115°F.) water into the bin to flush out the drain.

10. Clean the bin liner of mineral scale by mixing some ice machine scale remover and hot water, and using that solution to scrub the scale off of the liner.

11. Rinse the liner with hot water.

12. Sanitize the bin interior.

13. Replace the ice removed in step 1.

14. Push and release the On/Off button to restart ice making.

The ice scoop should be washed regularly, wash it just like any other food container.

Overall:

- Refrigerant: 8 oz R-134a
- Compressor: Hermetic, 1300 BTUH
- Condenser: Forced draft
- Fan blade: 5 blade, 7 inch
- Evaporator: Inverted, 24 cube cells. Copper cups attached to continuous serpentine
- Metering device: Cap tube
- Defrost method: Hot gas bypass with water assist
- Spray method: 6 water jets
- Water charge: 40 ounces
- Water valve: 115 volt solenoid, .19 GPM
- Water fill time: Varies with harvest time & purge setting
- Spray pump: Pedestal type.
- Drain pump: Magnetic drive, controlled by pressure switch
- Purge method: Overflow standpipe
- Control method: Electronic
- Cycle control: Thermistor + timers
- Freeze cycle timer A model:**10 minutes**, + - 4
- Freeze cycle timer B model :**11 minutes**, + - 4
- Harvest cycle timer: 20 seconds, + - 40
- Cube size adjustment: Freeze timer change.
- Harvest cycle adjustment: Harvest timer change
- Bin control: Thermostat. Opens on temperature fall, Cut Out: 35 degrees F. Cut In 45 degrees F. Range is adjustable.

Electrical Components:

- Compressor
- Fan motor
- Spray pump motor
- Drain pump motor
- Drain pump switch
- Bin light - LED type
- Bin light switch - magnetic reed
- Inlet water solenoid valve
- Hot gas valve
- Transformer
- Controller
- Water sensor
- Thermistor
- Bin thermostat

Electrical Sequence:

A closed bin thermostat signals to the controller a need for ice. The controller checks for water, if water is needed , the controller opens the inlet water solenoid valve to fill the reservoir. The hot gas valve is open to equalize the system. When the reservoir is full, the compressor, fan motor, water pump are switched on. After 5 seconds the hot gas valve shuts and ice making begins.

Water is sprayed up into the inverted cup mold. As the water is cooled and ice begins to form in the cups, the temperature of the evaporator will fall.

The freeze cycle continues until the temperature of the thermistor attached to the evaporator outlet tube falls to about 0°F A model and 3°F B model. At that point the controller starts a freeze cycle timer, whose default time is 10 minutes for A model and 11 minutes for B model. At the end of the freeze cycle's timed portion the controller switches to the harvest cycle.

The harvest cycle begins with the controller stopping the water pump and fan motor. At the same time it opens the hot gas valve and the inlet water solenoid valve. The ice is released by the combination of discharge refrigerant gas entering the evaporator serpentine and warming up the copper, plus the inlet water that flows to the evaporator, floods across the plastic platen to warm it up and be pre-chilled for the next cycle. Ice cubes drop individually and harvest continues until the thermistor attached to the suction line warms up to about 50°F. At that point a harvest timer starts, whose default time is 20 seconds. At the end of that time the harvest cycle ends and the freeze cycle restarts.

Bin control.

The machine's on and off modes are regulated by a bin thermostat. The cap tube for the bin thermostat is in the tube that holds the scoop. The machine will only begin ice making when the thermostat's contacts close. If the contacts re-open before the temperature of the evaporator drops below a preset point, the machine will stop. If the temperature is below that point when the contact s open, the machine will continue through a complete cycle and stop at the end of the harvest cycle.

Water System

The controller uses a Water Sensor to check for the presence of water in the reservoir and to measure the conductivity of the water.

The water sensor consists of two stainless steel probes located in a holder next to the water pump.

The probes sense the conductivity of the water. The higher the mineral content of the water, the better it can conduct electricity. The control system is capable of sensing water as clean as 10 microSiemens/cm.

If the controller cannot sense water and the bin thermostat is closed the controller will power the inlet water solenoid valve to fill the reservoir. The water fill is timed. There is a maximum amount of time allowed from the time the controller turned on the inlet water valve until the water sensor signals to the controller. That time is 2 1/2 minutes. If water is not sensed within 2 1/2 minutes, the controller will not proceed with an ice making cycle. Instead it will blink the Water light and try filling the reservoir in 20 minutes.

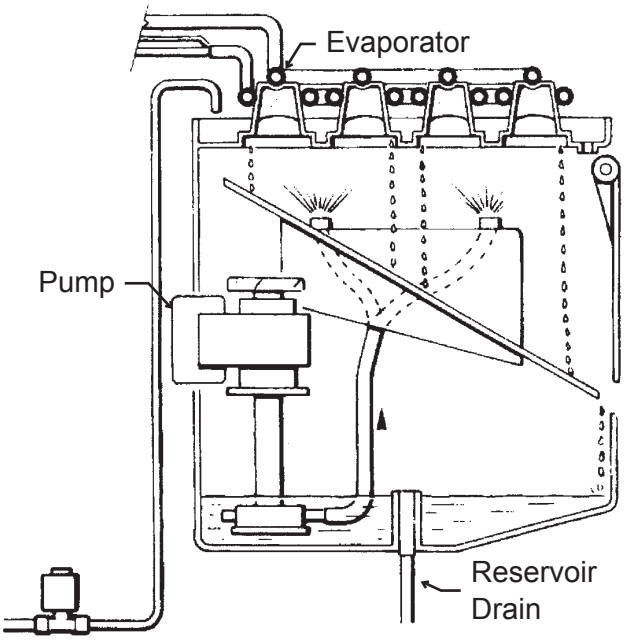

Freeze Cycle Water Schematic

Reservoir water dilution

The process of making ice from circulating water causes the pure water to freeze first, because it freezes at the warmest temperature. The remaining water will develop an increasing concentration of minerals. If that mineral concentration were allowed to continue, eventually the ice machine would become coated with mineral scale.

To combat the mineral build up, the reservoir water is diluted with fresh water every cycle. The controller adds enough water to fill the reservoir and extra water to overfill it. The extra water drains out through the standpipe in the reservoir.

The controller keeps the inlet water solenoid valve open until the evaporator temperature set point is reached, plus some extra time. The extra time is either pre-set or automatically determined by the controller.

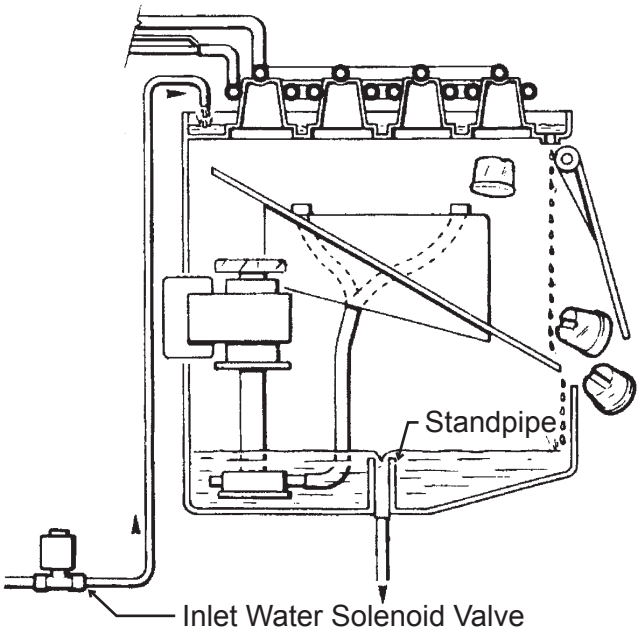

Harvest Cycle Water Schematic

Scoop and Thermostat Bracket

Control Panel, Bin Light and Curtain

Evaporator Platen

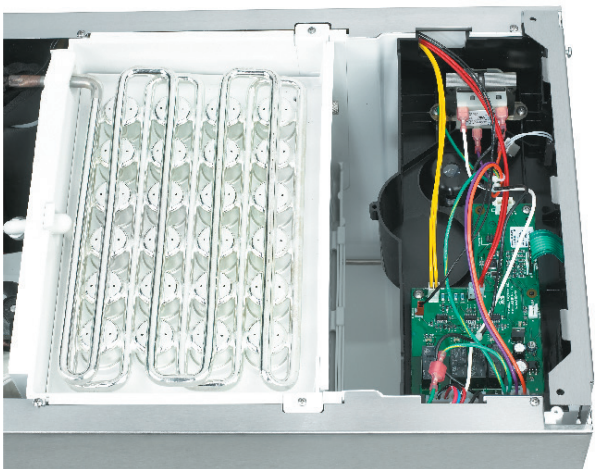

Evaporator and Controller

Inlet Water Solenoid Valve

Condenser and Bin Thermostat

Controller

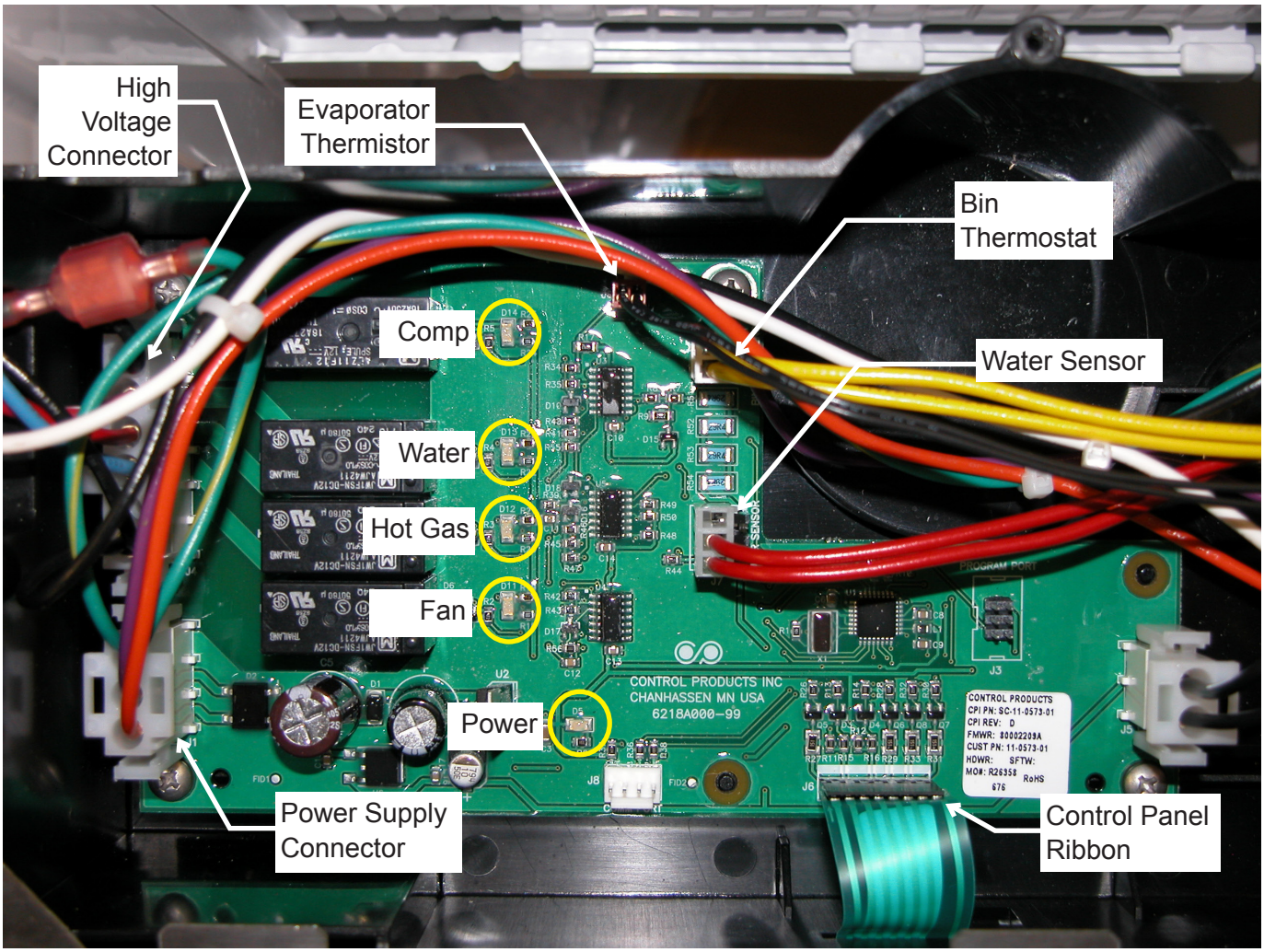

The controller is located at the front of the unit, under the top panel.

It is powered by a 12 volt transformer. It has 5 indicator lights:

- **Compressor** - Light is ON if compressor is powered
- **Water** - Light is ON if inlet water solenoid valve is powered
- **Hot Gas** - Light is ON when Hot Gas Valve is powered
- **Fan** - Light is ON when Fan motor is powered
- **Power** - Light is ON when power is connected to controller

Control Safeties:

No Water. If the Water Sensor cannot detect water, and the inlet water solenoid valve has been on for the maximum fill time, the controller will stop all action and wait 20 minutes to re-try water fill. During this time the Check Water light on the control panel will be blinking,

Maximum Freeze Time. If the freeze cycle should extend to 60 minutes, the controller will automatically put the machine into a Harvest cycle.

Maximum Harvest Time. 6 minutes

Time between restarts. After the machine has operated and then turned off, the controller will not restart the machine for four minutes.

Performance Information for A and B Models

Freeze Cycle, Minutes		Air Temperature					
		100	90	80	70	60	50
Water Temperature	100	37-38	36-37	34-35	32-33	31-32	29-30
	90	36-37	35-36	33-34	31-32	30-31	28-29
	80	36-35	32-33	30-31	28-29	27-28	26-27
	70	32-33	28-29	27-28	25-26	23-24	22-23
	60	27-28	25-26	24-25	22-23	20-21	19-20
	50	20-21	19-20	18-19	17-18	16-17	15-16
	40	18-19	17-18	16-17	15-16	15-16	15-16

Harvest Cycle, Seconds		Air Temperature					
		100	90	80	70	60	50
Water Temperature	80 - 100	55-60	60-70	70-80	80-90	90-100	110-115
	70 - 80	65-75	70-80	75-85	85-95	95-105	115-120
	50 - 70	70-80	75-85	85-95	125-135	140-150	160-170
	40 - 50	100-120	115-125	130-140	150-170	180-200	210-230

Total Cycle, Minutes		Air Temperature					
		100	90	80	70	60	50
Water Temperature	100	38-39	37-38	36-37	34-35	33-34	31-32
	90	38-39	36-37	35-36	33-34	32-33	30-31
	80	37-38	33-34	31-32	30-31	29-30	27-28
	70	33-34	29-31	28-29	26-27	25-26	24-25
	60	29-30	27-28	25-26	24-25	22-23	21-22
	50	21-22	20-21	19-20	19-20	19	18-19
	40	20-21	19-20	19	18-19	19	19-21

Ice per cycle: 1 lb

Water drained / cycle: Varies by harvest cycle length and purge setting. Typical amounts are @ 70/50 = 52 oz. @ 90/70 = 13 oz

Compressor amps: 2.6 - 3.2

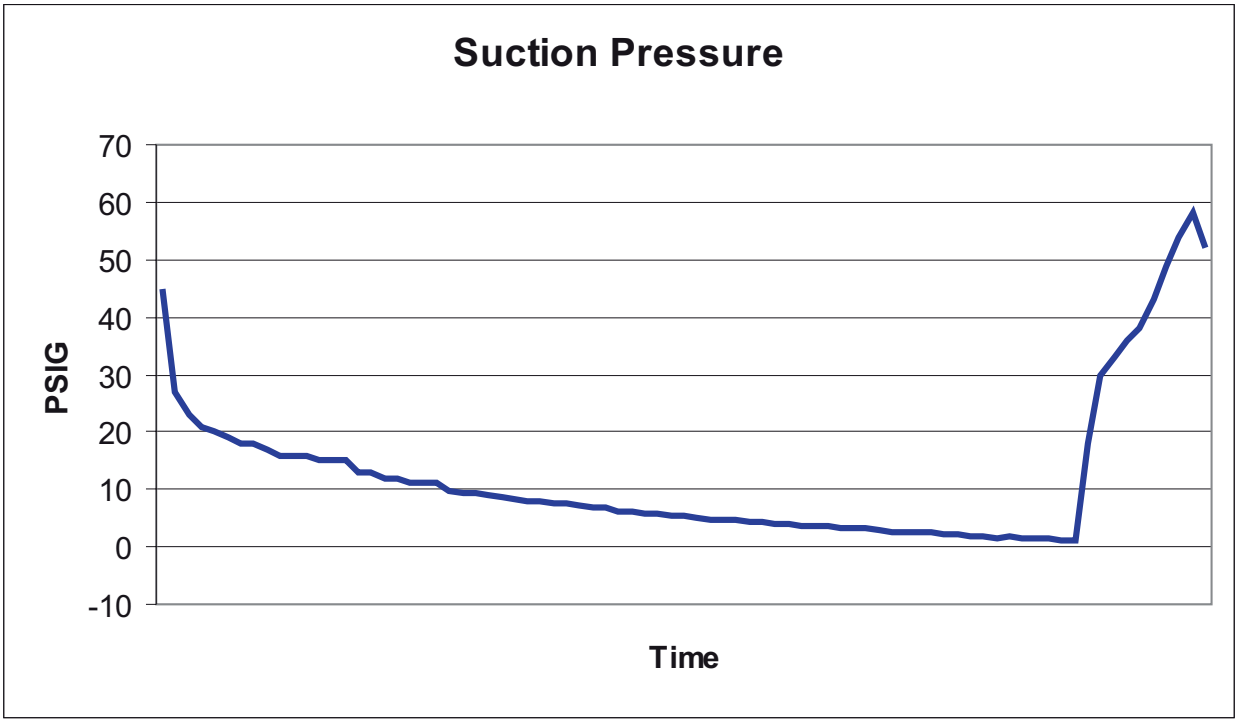
Suction Pressure
70
60
50
40
30
20
10
0
-10
PSIG
Time

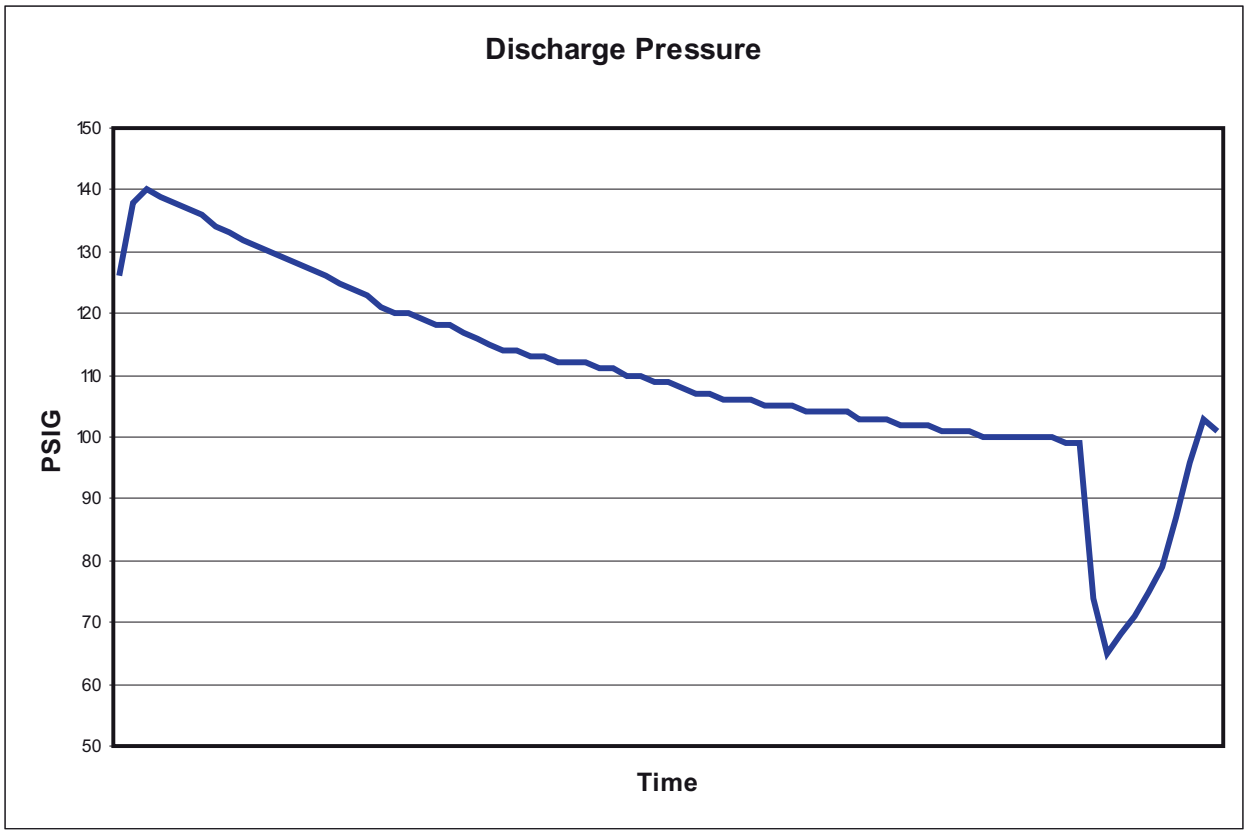
Discharge Pressure
150
140
130
120
110
100
90
80
70
60
50
PSIG
Time

Thermistor Values

Deg. F	Ohms	Deg. F	Ohms	Deg. F	Ohms	Deg. F	Ohms	Deg. F	Ohms
0	85325	52	18873	104	5325	156	1819	208	724
1	82661	S3	18381	105	5208	157	1785	209	713
2	80090	54	17903	106	5093	158	1752	210	701
3	77607	55	17439	107	4981	159	1719	211	690
4	75210	56	16988	108	4872	160	1687	212	679
5	72896	57	16551	109	4766	161	1655	213	668
6	70660	58	16126	110	4663	162	1624	214	657
7	68501	59	15714	111	4562	163	1594	215	646
8	66415	60	15313	112	4463	164	1565	216	636
9	64400	61	14924	113	4367	165	1536	217	626
10	62453	62	14546	114	4273	166	1508	218	616
11	60571	63	14179	115	4182	167	1480	219	606
12	58752	64	13823	116	4093	168	1453.	220	597
13	56995	65	13476	117	4006	169	1427	221	587
14	55296	66	13139	118	3921	170	1401	222	578
15	53653	67	12812	119	3838	171	1375	223	569
16	52065	68	12494	120	3757	172	1350	224	560
17	50529	69	12185	121	3678	173	1326	225	551
18	49043	70	11884	122	3601	174	1302	226	543
19	47607	71	11592	123	3526	175	1279	227	534
20	46217	72	11308	124	3452	176	1256	228	526
21	44872	73	11031	125	3381	177	1234	229	518
22	43571	74	10763	126	3311	178	1212	230	510
23	42313	75	10502	127	3243	179	1190	231	502
24	41094	76	10247	128	3176	180	1169	232	495
25	39915	77	10000	129	3111	181	1149	233	487
26	38774	78	9760	130	3047	182	1129	234	480
27	37669	79	9526	131	2985	183	1109	235	472
28	36600	80	9299	132	2924	184	1090	236	465
29	35564	81	9077	133	2865	185	1071	237	458
30	34561	82	8862	134	2807	186	1052	238	451
31	33590	83	8652	135	2751	187	1034	239	444
32	32649	84	8448	136	2696	188	1016	240	438
33	31738	85	8250	137	2642	189	998	241	431
34	30855	86	8056	138	2589	190	981	242	425
35	30000	87	7868	139	2537	191	965	243	419
36	29171	88	7685	140	2487	192	948	244	412
37	28368	89	7507	141	2438	193	932	245	406
38	27589	90	7333	142	2390	194	916	246	400
39	26835	91	7164	143	2343	195	901	247	394
40	26104	92	6999	144	2297	196	885	246	389
41	25395	93	6839	145	2252	197	871	249	383
42	24707	94	6683	146	2208	198	856	250	377
43	24041	95	6530	147	2165	199	842		
44	23394	96	6382	148	2123	200	828		
45	22767	97	6238	149	2082	201	814		
46	22159	98	6097	150	2042	202	800		
47	21569	99	5960	151	2003	203	787		
48	20997	100	5826	152	1965	204	774		
49	20442	101	5696	153	1927	205	761		
50	19903	102	5569	154	1890	206	749		
51	19381	103	5446	155	1855	207	737		

Service Diagnosis

No Ice

Problem	Likely Cause	Probable Solution
No power to unit	Power disconnected	Check breaker or fuse. Reset or replace, restart and check
No power to controller	Transformer open	Replace transformer
Control panel open	Switch failure	Test ribbon cable, see page 32
Shut down on maximum water fill time - water light flashing	Water shut off	Restore water supply
Very long freeze cycle	Water leak	Check curtain, sump
	Dirty condenser	Clean condenser
	Restricted location, intake air too hot or blocked	Eliminate restriction, have machine moved
	Evaporator thermistor not sensing properly	Check thermistor
	Spray jets dirty	Remove spray platform and clean spray jets
	Inlet water valve leaks through during freeze	Check inlet water valve
	Low on refrigerant	Check cube formation,
	Connected to hot water	Check for bleed thru from / missing check valve in building water supply
Cannot make ice	Spray pump not pumping	Check pump motor
	Fan motor not turning	Check fan motor, check fan blade, check controller for voltage output
	Pump hose disconnected	Check hose
	Very low on refrigerant	Add access valve, add refrigerant as a test. If unit makes ice, find and correct leak.
	Compressor not operating	Check compressor start components, check PTCR resistance and temperature
		Check compressor voltage
		Check compressor windings
	Hot gas valve leaks through during freeze	Check hot gas valve for hot outlet during freeze
	Compressor inefficient	Check compressor amp draw, if low and all else is correct, change compressor

Makes excessive noise

Problem	Likely Cause	Probable Solution
Fan blade vibrates	Blade is bent	Replace fan blade
	Fan motor mount is broken	Replace motor mount
Compressor vibrates	Mounting loose	Check mounting
Water pump vibrates	Pump bearings worn	Replace pump
Panels vibrate	Mounting screws loose	Tighten screws

Makes ice, does not harvest

Problem	Likely Cause	Probable Solution
Ice wrong size	Environment changed	Adjust cube size
Little heat to evaporator	Hot gas valve does not open	Check voltage to coil when unit is in harvest, check controller indicator light.
	Water temperature very low	Adjust harvest time
	Fan motor does not stop	Check voltage, replace controller

Makes poor quality ice

Problem	Likely Cause	Probable Solution
Spray pattern poor	Spray jets dirty	Clean jets
Runs out of water	Water leaking from reservoir	Correct leak
High TDS water supply	Groundwater supply	Treat water

Makes ice, but melts rapidly

Problem	Likely Cause	Probable Solution
Restricted drain	Gravity drain hose has air block	Check for kinks or traps
Pooled water in bin	Pump model switch not starting pump	Check / replace switch

No Response from Control Panel Switches

- Test membrane switch panel, see page 32.

Removal and Repair

Bin Thermostat

1. Disconnect electrical power.

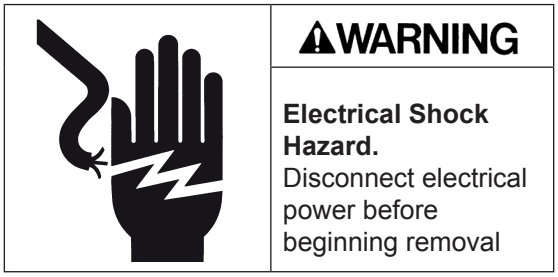

2. Remove service panel.
3. Remove back panel.

Note: If unit is built in it must be pulled out to change the bin thermostat.

4. Pull cap tube out from the back of the ice storage bin and cap tube holder.
5. Remove two screws and the bin thermostat contact section from its mounting bracket.
6. Disconnect two wires from the bin thermostat contact section and remove the thermostat from the ice machine.
7. Reverse to reinstall.

Inlet Water Solenoid Valve

1. Disconnect electrical power.
2. Remove service panel.
3. Shut water supply OFF.
4. Disconnect inlet water supply tube from inlet water solenoid valve.
5. Unplug wire harness from valve coil.
6. Remove two screws holding valve to chassis.
7. Squeeze hose clamp larger and push away from solenoid valve outlet.
8. Pull hose from outlet of valve.
9. Reverse to reassemble.

Curtain

1. Shut unit off.
2. Loosen both thumbscrews holding curtain bracket to freezing chamber.
3. Pull out and remove curtain with bracket from ice machine.
4. Reverse to reassemble.

Spray Platform

1. Remove curtain.
2. Lift spray platform up until it disconnects from its fitting.
3. Pull forward and remove from the ice machine.
4. Reverse to reassemble.

Water Pump

1. Remove spray platform
2. Remove back panel.

Note: If unit is built in it must be pulled out to change the water pump.

3. Disconnect power and ground wires from pump motor.
4. Rotate pump body CW and lift up to remove it.
5. Reverse to reassemble.

Evaporator Thermistor

Note: If unit is built in it must be pulled out to change the evaporator thermistor.

⚠WARNING

Electrical Shock Hazard.
Disconnect electrical power before beginning removal

1. Shut machine off. If unit was making ice, manually harvest the ice.
2. Disconnect electrical power.
3. Remove top panel.
4. Remove cover from controller box.
5. Disconnect thermistor wire from controller.
6. Locate thermistor sensor, it is attached to the suction line, just above the accumulator and is covered with insulation tape. Remove the insulation.
7. Disconnect sensor bulb from suction line (it's held on with a metal clip).
8. Remove thermistor from ice machine.
9. Reverse to reassemble. It is very important that the bulb be re-insulated.

Transformer

Note: If unit is built in it must be pulled out to change the transformer.

1. Disconnect electrical power.
2. Remove top panel.
3. Remove controller cover.
4. Unplug leads from transformer.
5. Remove screws holding transformer to controller box and pull transformer up and out of the ice machine.
6. Reverse to reassemble.

Controller

Note: If unit is built in it must be pulled out to change the controller.

1. Disconnect electrical power.
2. Remove top panel
3. Remove controller box cover.
4. Unplug all connections.
5. Remove screws holding controller to housing, and lift controller from unit.

Note: To avoid damaging the controller, touch the metal chassis of the unit prior to touching the replacement controller.

6. Reverse to reassemble.

Control Panel

1. Disconnect electrical power.
2. Remove top panel
3. Remove controller box cover.
4. Unplug ribbon cable connection.
5. Push control panel away from the front of the machine. Begin at the ribbon cable attachment point.

Note: Control panel is held on by adhesive and the adhesive is thinnest at the cable point.

6. Separate control panel from controller box and remove from the ice machine.
7. Reverse to reassemble.

Removal and Repair - Cabinet Removal

Certain components require the removal of the cabinet for repair access.

1. If the machine is in a freeze mode, perform a manual harvest.
2. Remove all ice.
3. Drain reservoir.
4. Remove service panel and kick plate.
5. Remove back panel.
6. Disconnect electrical power.

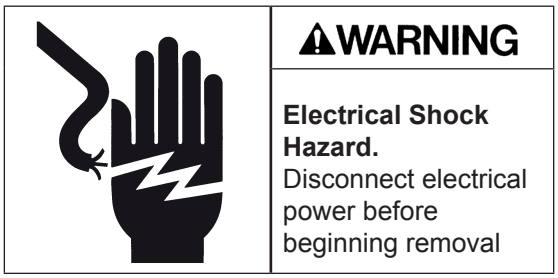

⚠WARNING

Electrical Shock Hazard.
Disconnect electrical power before beginning removal

7. Disconnect water and drain tubing.
8. Remove door.
9. Remove top panel.
10. Remove controller box cover.
11. Disconnect thermistor from controller, pull wire back to suction line.

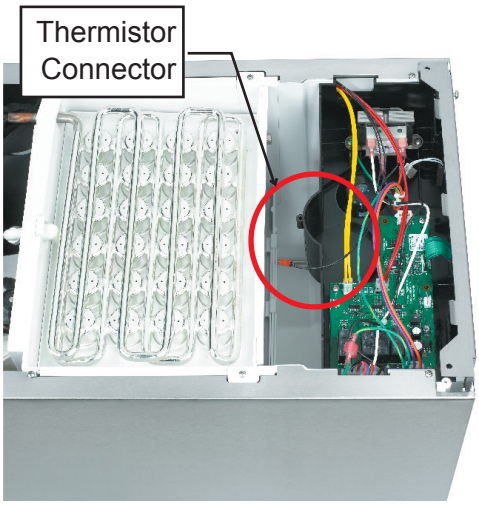

12. Remove curtain & hanger.

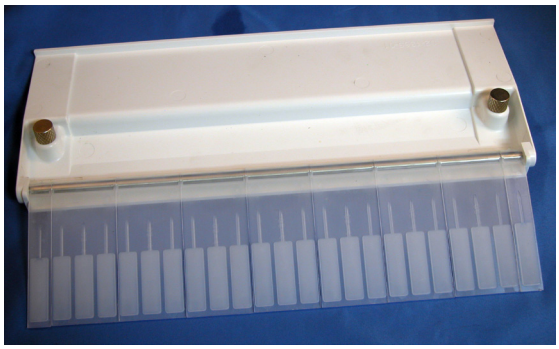

13. Locate elbows where water flows onto the evaporator platen.

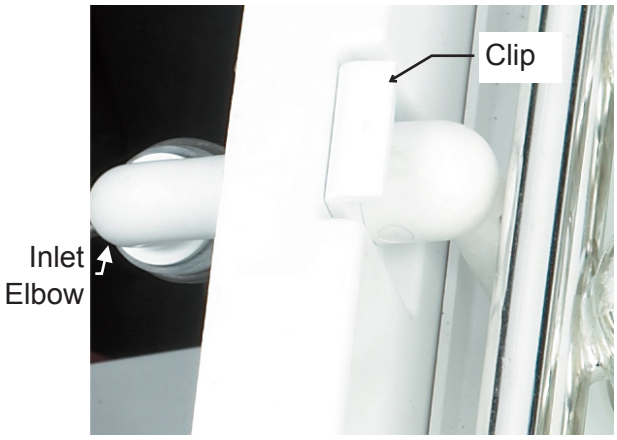

14. Pull clip up. Push inner elbow back and rotate it until it points straight up, then push it back through the hole in the back of the freezing compartment.

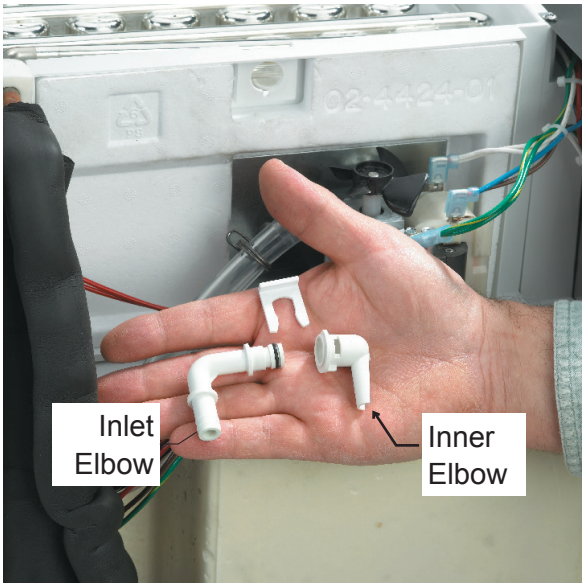

15. Pull water inlet elbow out of inner elbow.

16. Remove two screws holding freezing compartment brace to cabinet, lift brace up.

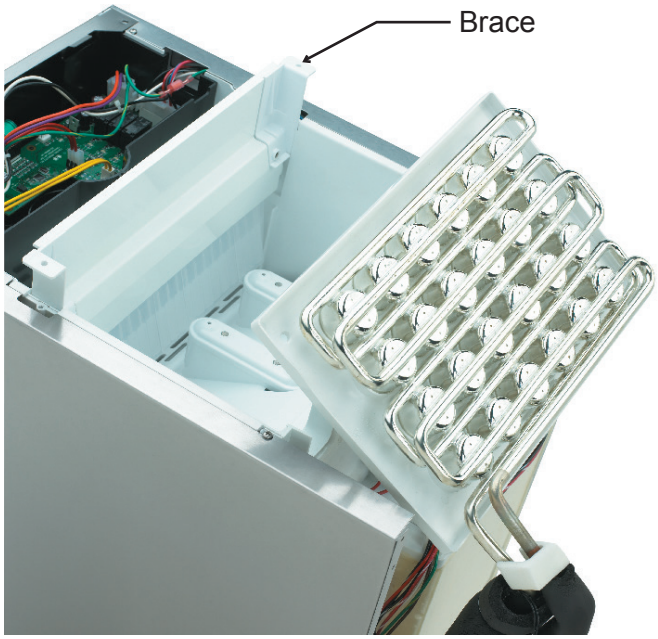

17. Lift evaporator platen up and tilt back enough for bin assembly to clear the base.

18. Remove air baffle.

19. Unplug 7 wire harness connector (at back of bin).

20. Remove 1 screw at each corner of the base.

21. Lift bin assembly off the base.

Note: Prop evaporator assembly up. A 3' length of 3/4" PVC tubing with one end inserted into the cup mold and the other against the base will hold it up.

The hot gas valve, fan motor, condenser and compressor are now exposed for service.

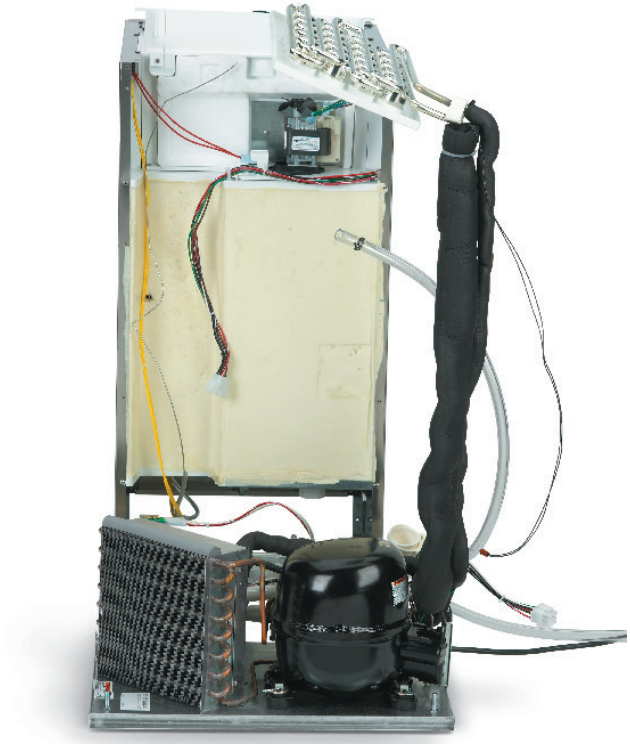

Chassis Shown in Front of Bin Assembly

Refrigeration Service

This ice machine use R-134a type refrigerant. There are specific rules for handling that refrigerant.

To check for system pressures, add a field supplied clamp-on type service valve as a temporary means of system access. After diagnosis and before final repair, replace the clamp-on type valve with valves that are brazed onto the process tubes of the system.

Use a low flow of dry nitrogen when brazing on the system.

Install a new filter drier when replacing a refrigeration component or after a refrigerant leak repair.

Evacuate the system to at least 300 microns and use a micron gauge to measure the evacuation level.

Weigh in the nameplate charge. The machine is critically charged and a partial ounce mis-charge will affect performance.

Membrane Switch

Unplug and check connector pins (left side from front is pin 1), read about 10 ohms when activating the button, and OL when not pressing the button: Pin 2-3 On/Off Switch; 4-3 Clean Reset Switch

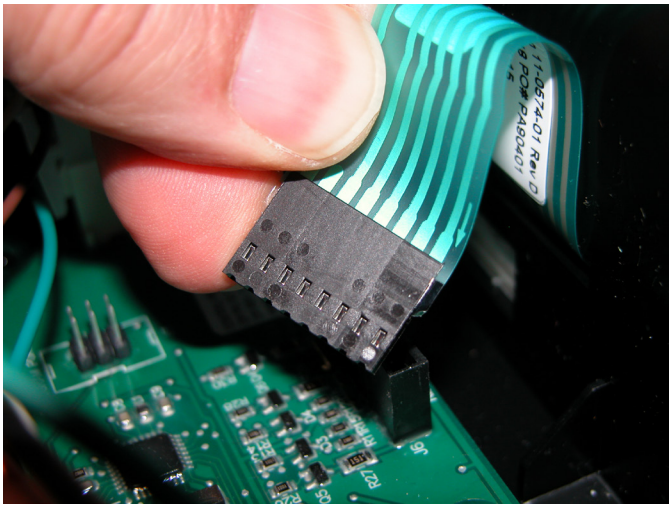

Bin Thermostat Altitude Adjustment Screw

Altitude	Degrees Rotation to Turn Adjustment Screw
1000	11 CW
2000	31 CW
3000	52 CW
4000	72 CW
5000	92 CW
6000	111 CW
7000	128 CW